TRIUMF – Canada's particle accelerator Center

Oliver Kester

Director, Accelerator Division, TRIUMF

CAP congress 2025,
June 09, 2025

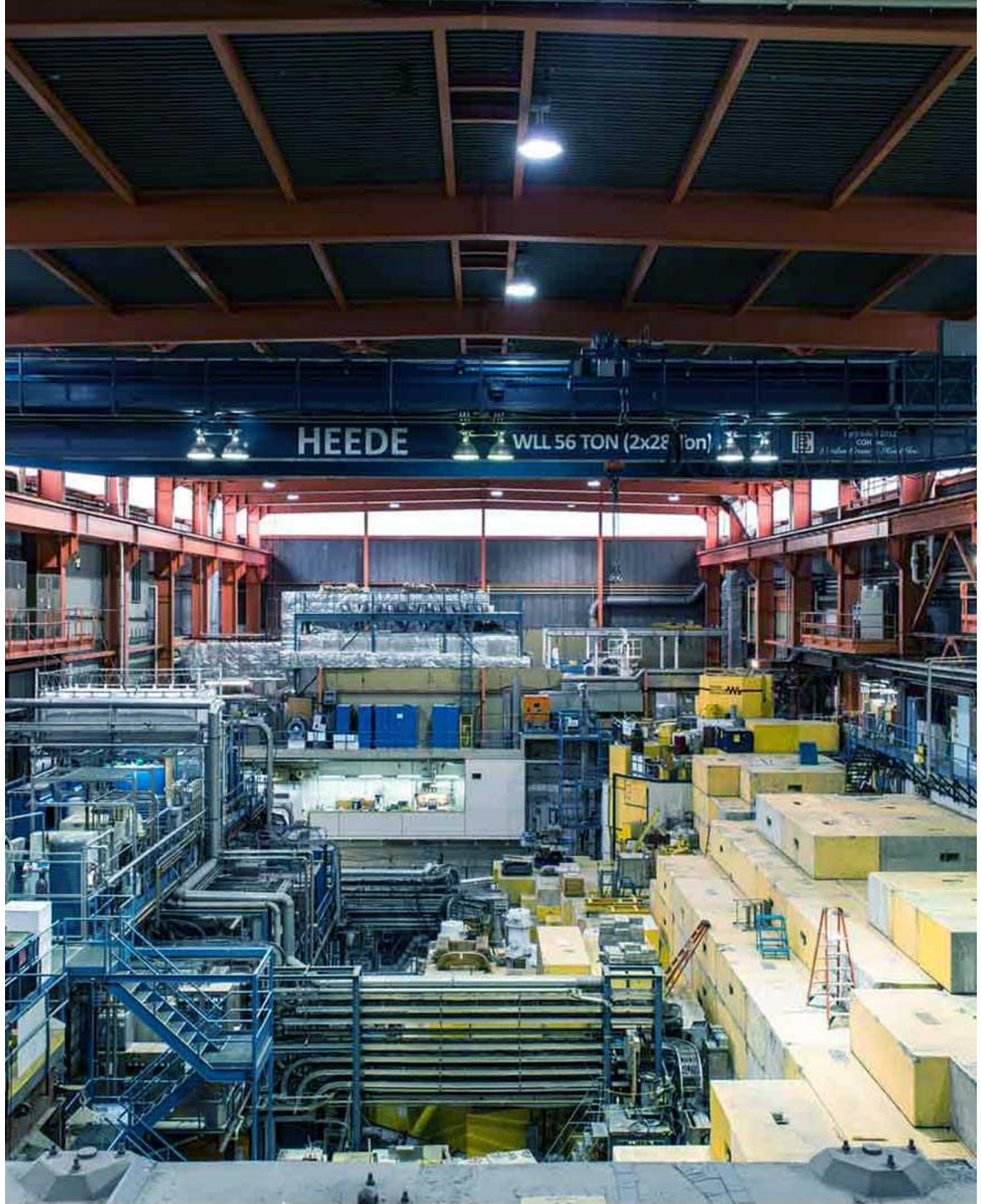

Discovery, accelerated

TRIUMF is Canada’s particle accelerator centre.
A world-class hub of research, education, and innovation that is home to ~600 staff and 200 students and post docs.

Founded in 1968 by the University of British Columbia, Simon Fraser University, and the University of Victoria, TRIUMF is one of Canada's major investments in large-scale research infrastructure.

TRIUMF has five decades of experience in building a rich particle accelerator infrastructure that enables cutting-edge accelerator based research while growing accelerator expertise.

TRIUMF accelerator complex

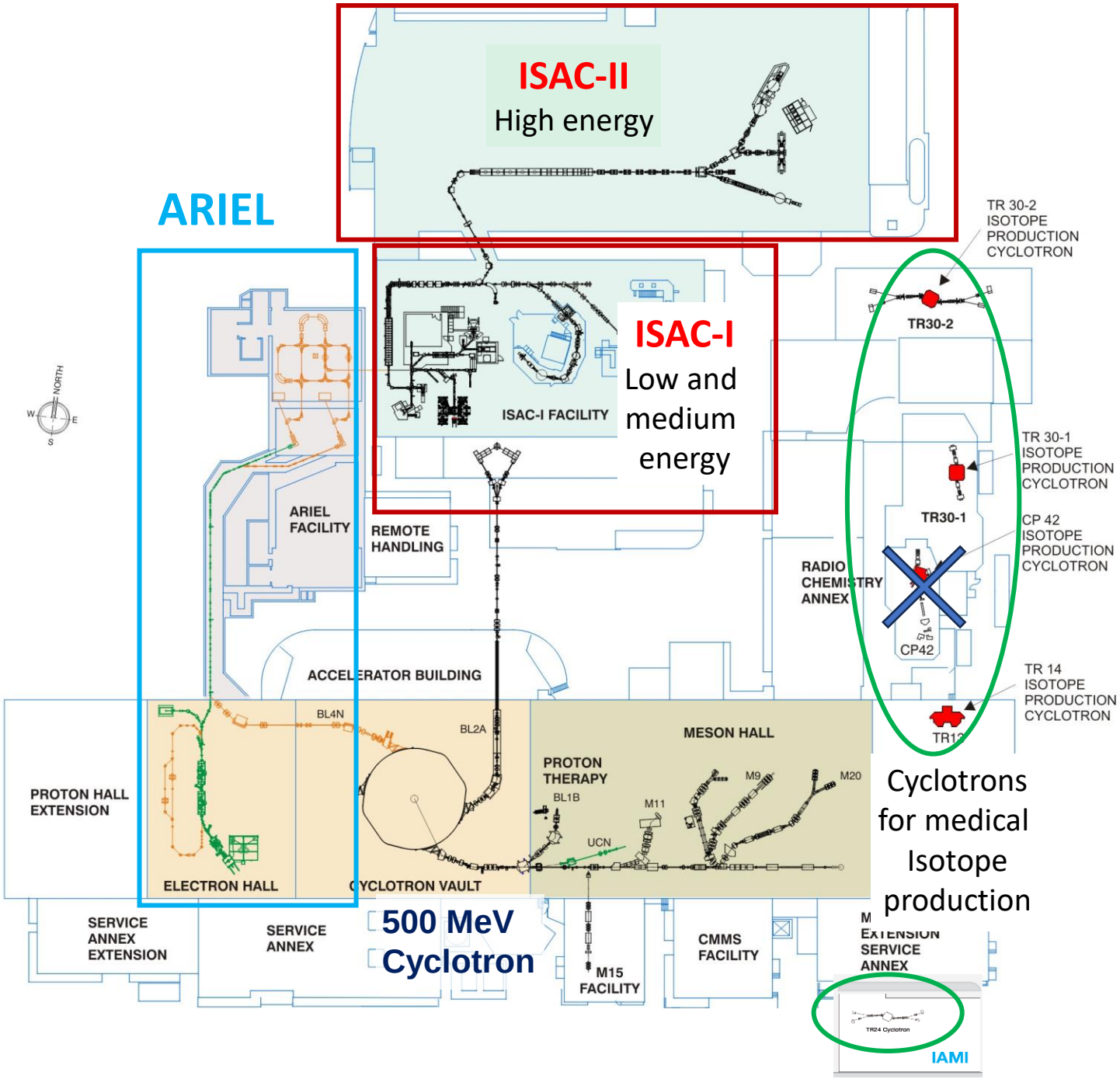

Cyclotrons for medical Isotope production

Primary beam driver:

Cyclotron, 500 MeV, H^-

Produces rare isotopes, neutrons and muons!

Isotope Separator and Accelerator facility - ISAC

Isotope Separator Online (ISOL) facility

ISAC-I: Normal conducting-linac, 0.15-1.5 MeV/u

ISAC-II: Superconducting-linac, 5-15 MeV/u

Advanced Rare Isotope Laboratory - ARIEL

Superconducting electron linac

30 MeV, 10 mA, cw

4 Cyclotrons for medical isotope production

(Including a TR24 in the Institute for advanced Medical Isotope – IAMI)

Activities in the 5year plan 2025-2030

- Contribution agreement has been signed, which lays out the funded activities (next slide).
- The Implementation Plan has been completed and describes the activities and deliverables in the 2025-2030 period.
  It outlines how TRIUMF will deliver on its mission over the next five years.
- For the Accelerator complex that translates to:
  - Ensure ARIEL is ready for Gate-4A (beam commissioning) in the TRIUMF project management process by 2027
  - Deliver 5000 hours of radioactive isotope beam to ISAC by the 2029 operational year → beam operations ramp-up of ARIEL
  - Refurbish key infrastructure and accelerator systems
    → cyclotron refurbishment (cyclotron control system upgrade, RF-systems, vacuum systems etc.)
    → Rare Isotope beam (RIB) production and delivery improvements of ISAC.
  - Delivery of external commitments (HL-LHC, THz radiation infrastructure, PC-CANS, EIC [see talk of R. Laxdal]…)

Discovery, accelerated

Development of the accelerator complex

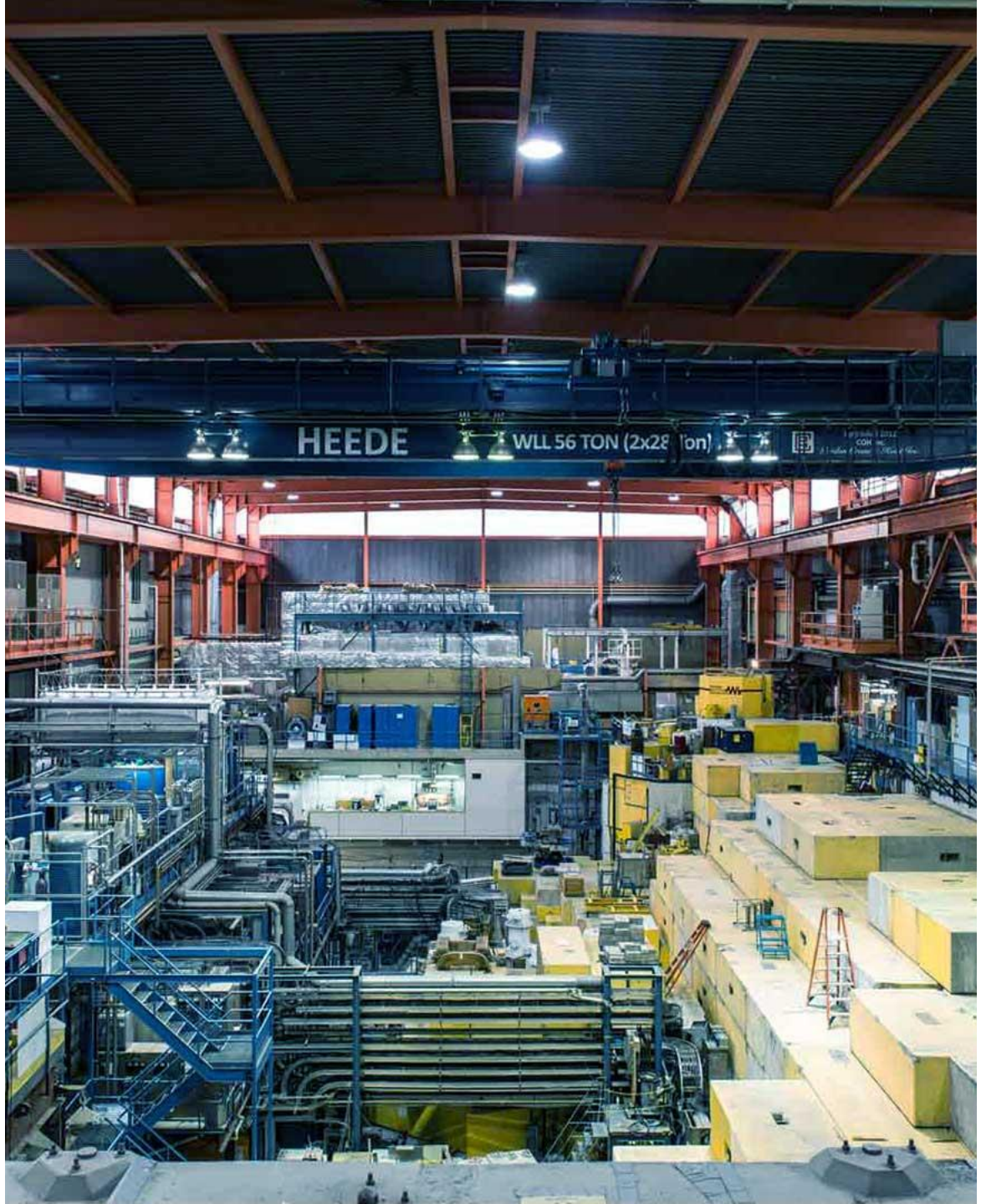

Major Achievement: Replacement of the horizontal injection beamline + new injector

- Cyclotron horizontal injection beamline from the I1 →oldest system of the accelerator complex
- Replaced by a beam line that also connects to the new 300 kV injector terminal I2.
  → New vacuum boxes and pumps, diagnostics, magnetic stray field compensation, optics, buncher and controls

New injector I2

- New ion source, new 300 kV terminal and all services
- Ion source is ready, demonstrated at test stand: H^- emittance at 1 mA: 20.8 µm (design goal: 20 µm)
- All fabrication completed, still installation to be done

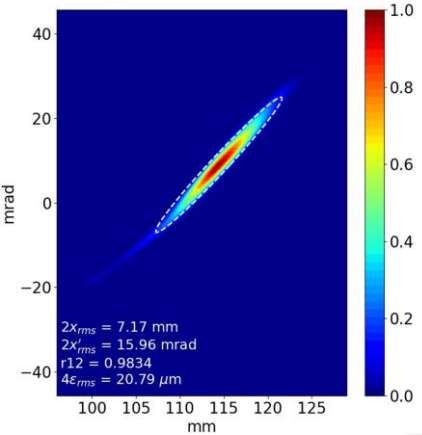

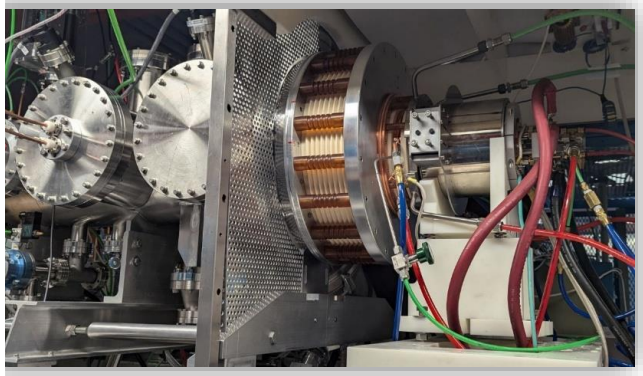

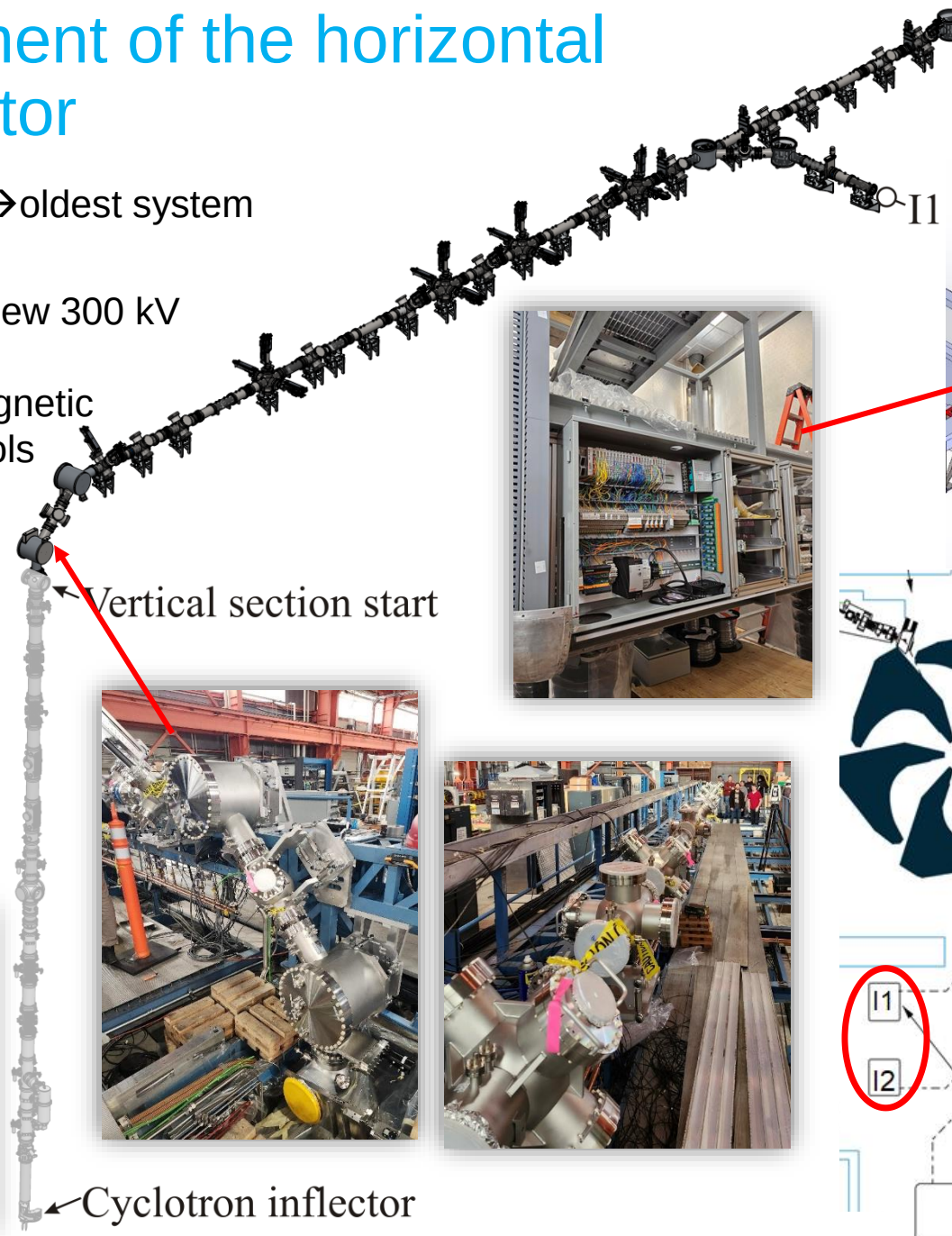

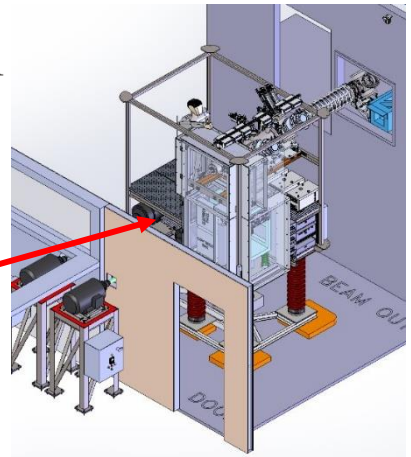

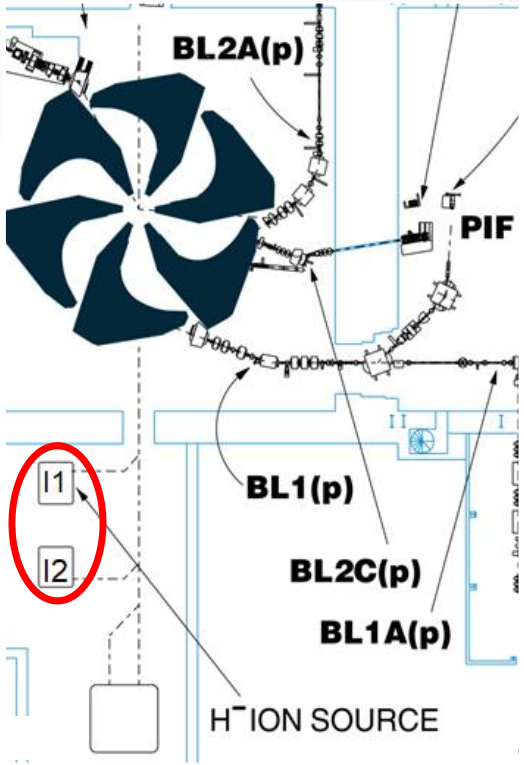

ARIEL – superconducting electron-Linac

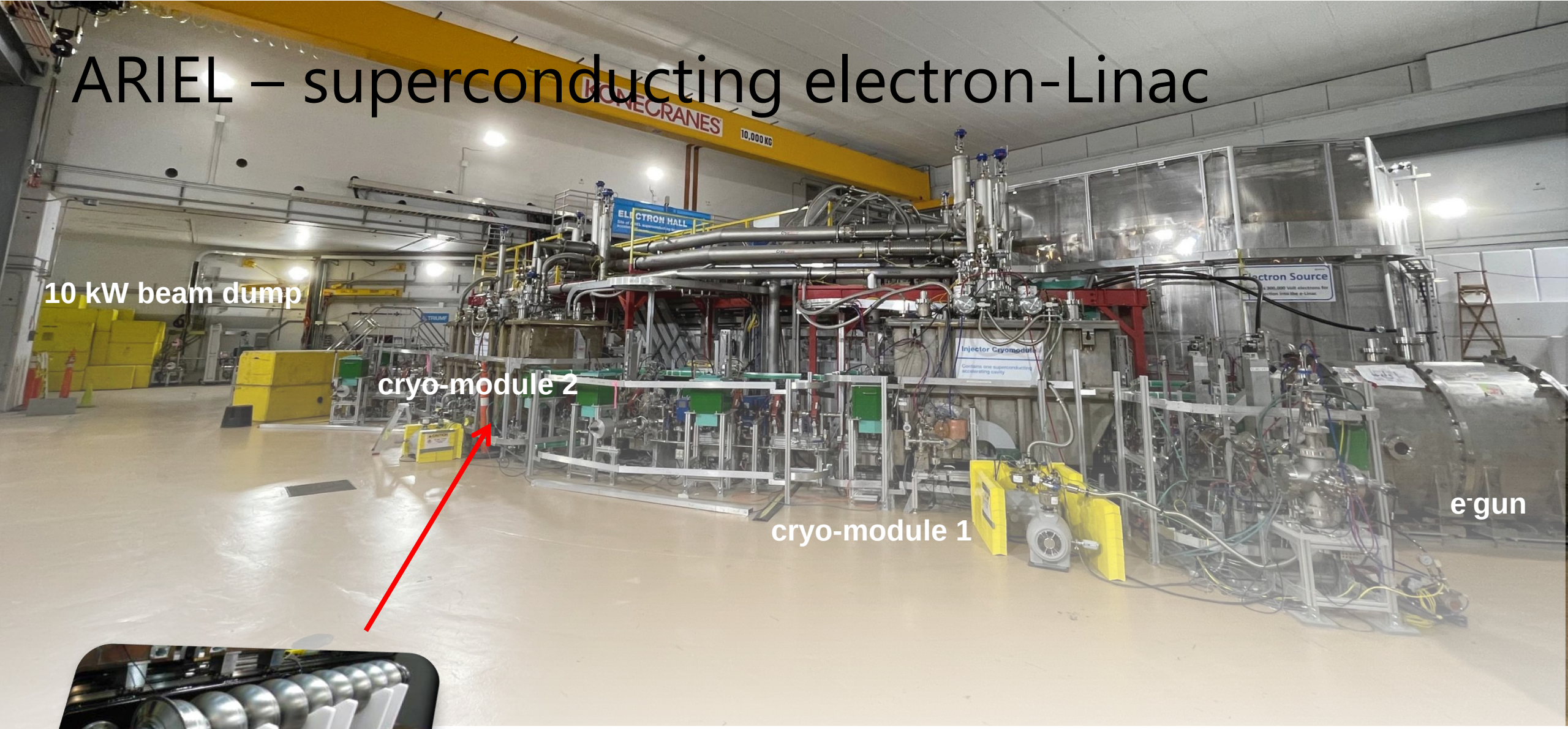

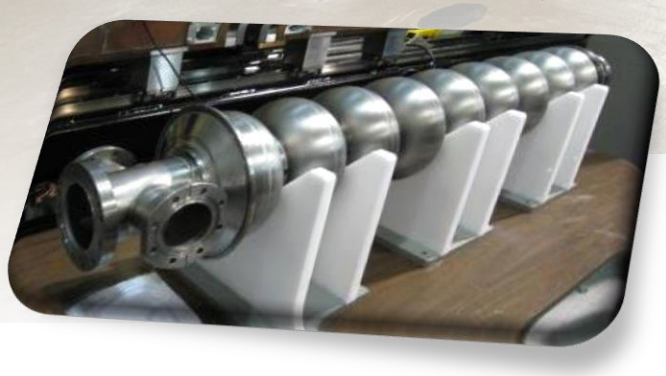

- E-gun delivers max. 10 mA at 300 keV beam
- The injector cryomodule (1) accelerates to 5-10 MeV
- The accelerator cryomodule (2) is equipped with two cavities and reaches max. 30 MeV.

ARIEL – superconducting electron-Linac

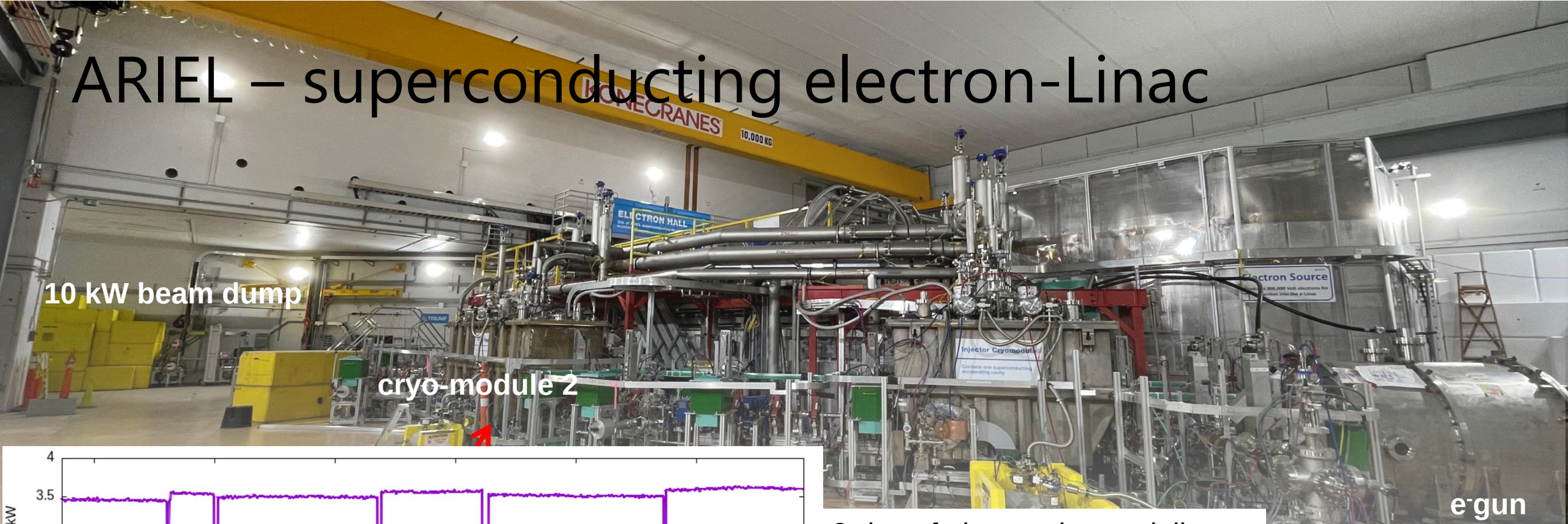

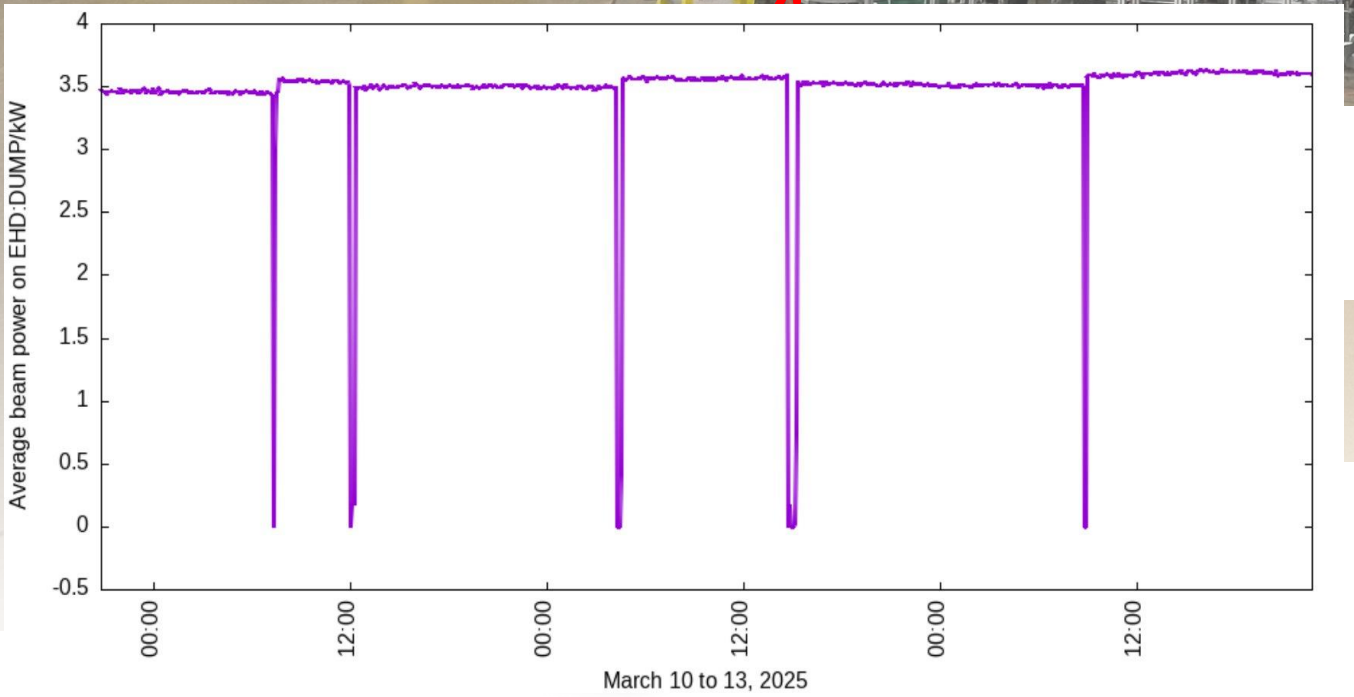

3-day of electron beam delivery at 30 MeV and > 3 kW. 5 beam trips, ~98% up time.

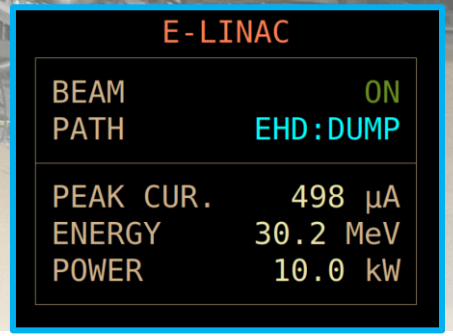

- E-gun delivers max. 10 mA at 300 keV beam
- The injector cryomodule (1) accelerates to 5-10 MeV
- The accelerator cryomodule (2) is equipped with two cavities and reaches max. 30 MeV.

THz radiation project at the ARIEL e-linac

Part of the infrastructure development for the photon science community (CFI funded, collaboration led by Scott Hopkins [see the talk in this session]).

- SRF high beam brightness photo-gun
- Clean room for the photo-gun laser system on top of the e-hall
- Bunch compressor chicane
- **Progress:**
  - First THz radiation detected at the ARIEL e-linac in November 2024
  - Great diagnostics tool for longitudinal beam parameter – quadratic dependence on the bunch length

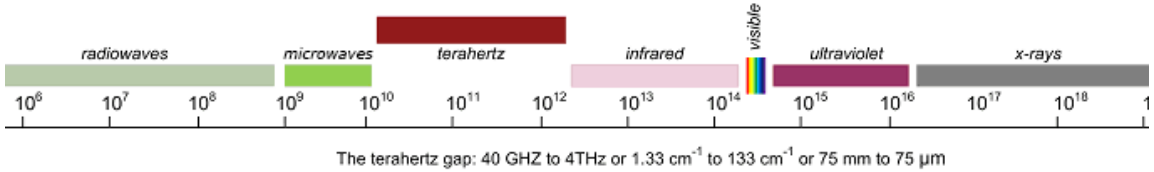

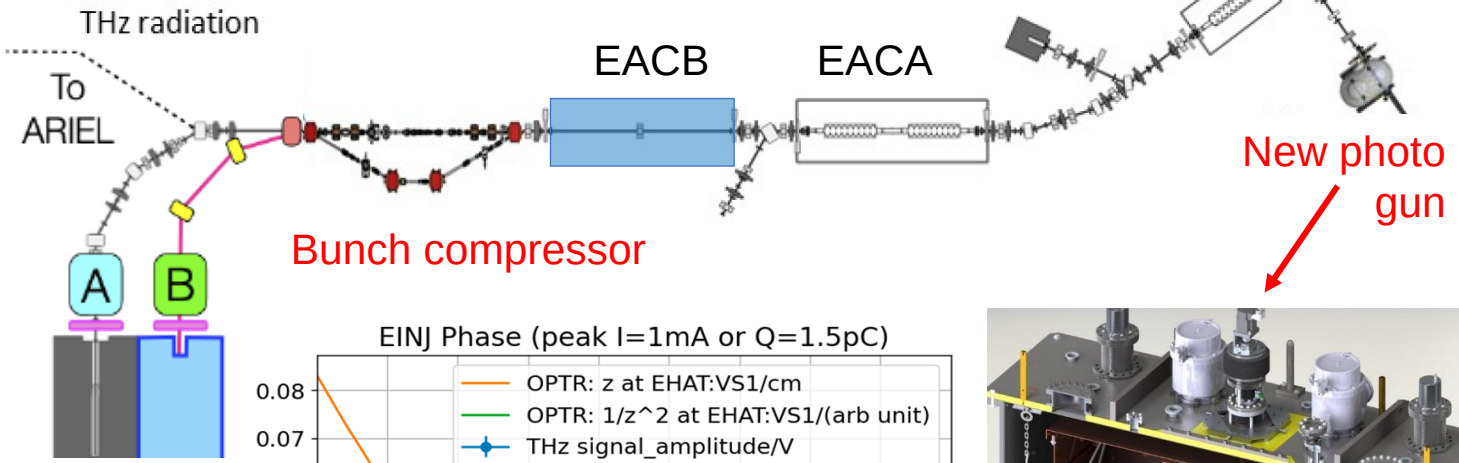

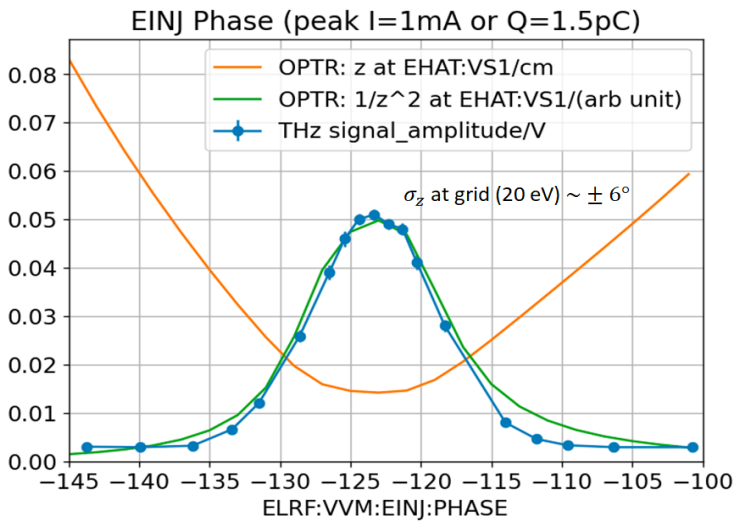

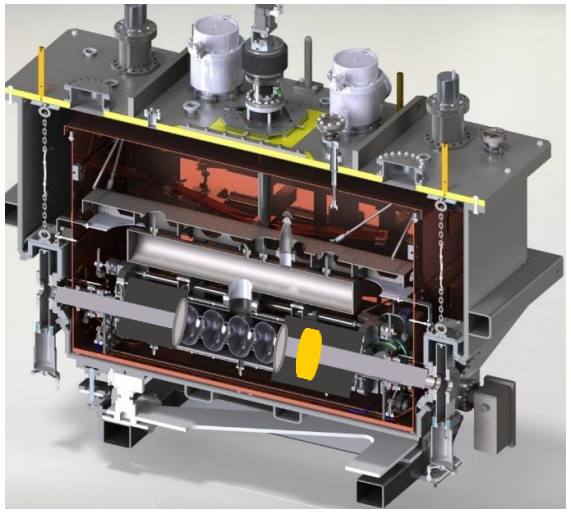

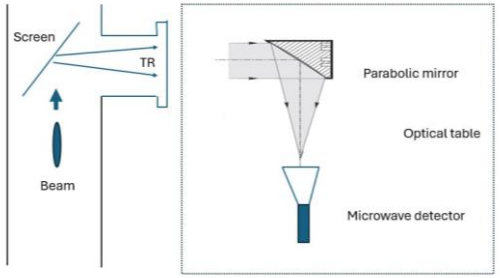

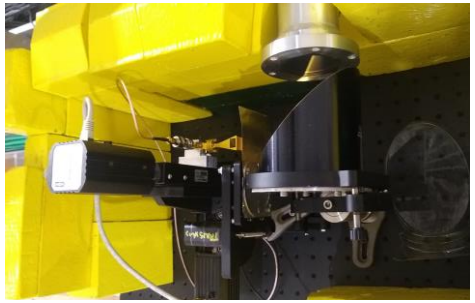

Discovery, accelerated

The future of beam development and delivery - Model based beam tuning

- At TRIUMF a web-based framework and python interface to communicate with the accelerator control system has been developed for
  High-level applications (HLA).
- Emerged from HLA → Model Coupled Accelerator Tuning (MCAT).
  → Coupled use of an envelope code in parallel to machine tuning, fed by on-line measured beam parameter.
- Beam orbit correction using Bayesian Optimization
  Finding the steerer values that maximize transmission is treated as a black box problem. Bayesian Optimization is to build a probabilistic model which accurately represents the objective function (transmission)

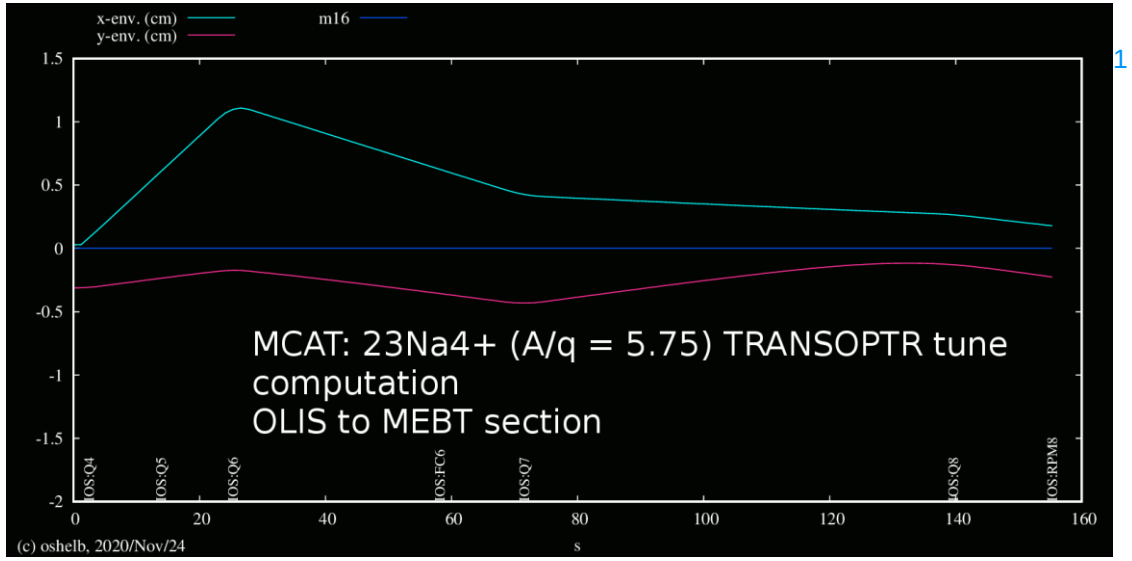

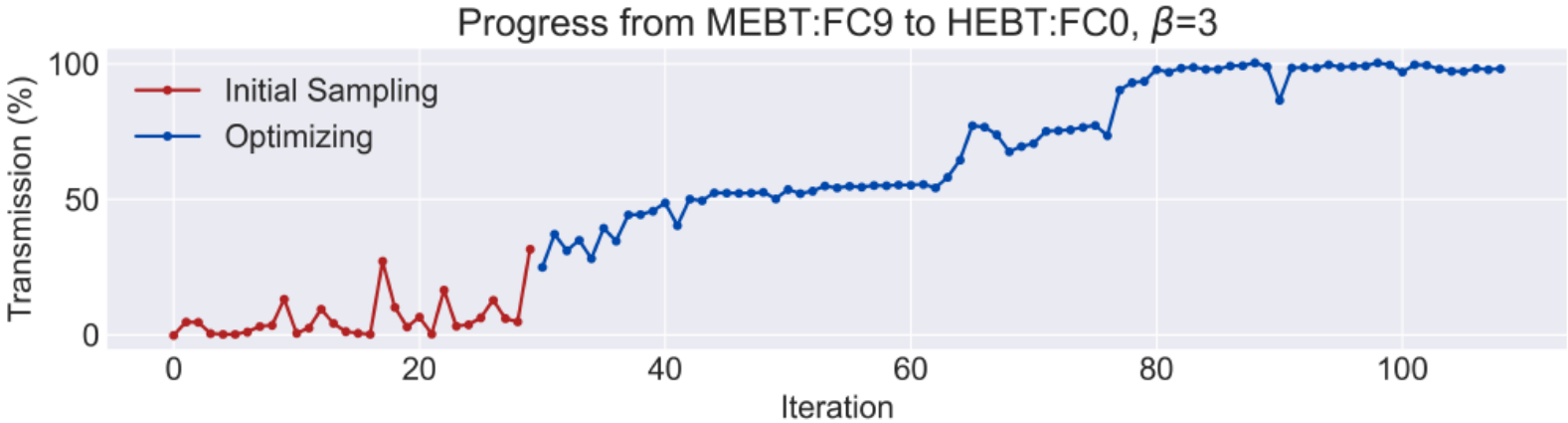

TRIUMF

Towards the completion of the Advanced Rare Isotope Laboratory (ARIEL) project

ARIEL: ISAC×3

- ARIEL is the world’s most powerful isotope separation online complex.
- It will triple ISAC's present rare isotope capabilities.
- ARIEL is the only rare isotope facility that will provide three RIB beams simultaneously to experiments.
- Will add two new ISOL target stations, driven by high-power proton (50 kW) and electron (100 kW) beams
- Production and processing of medical isotopes in proton beam dump

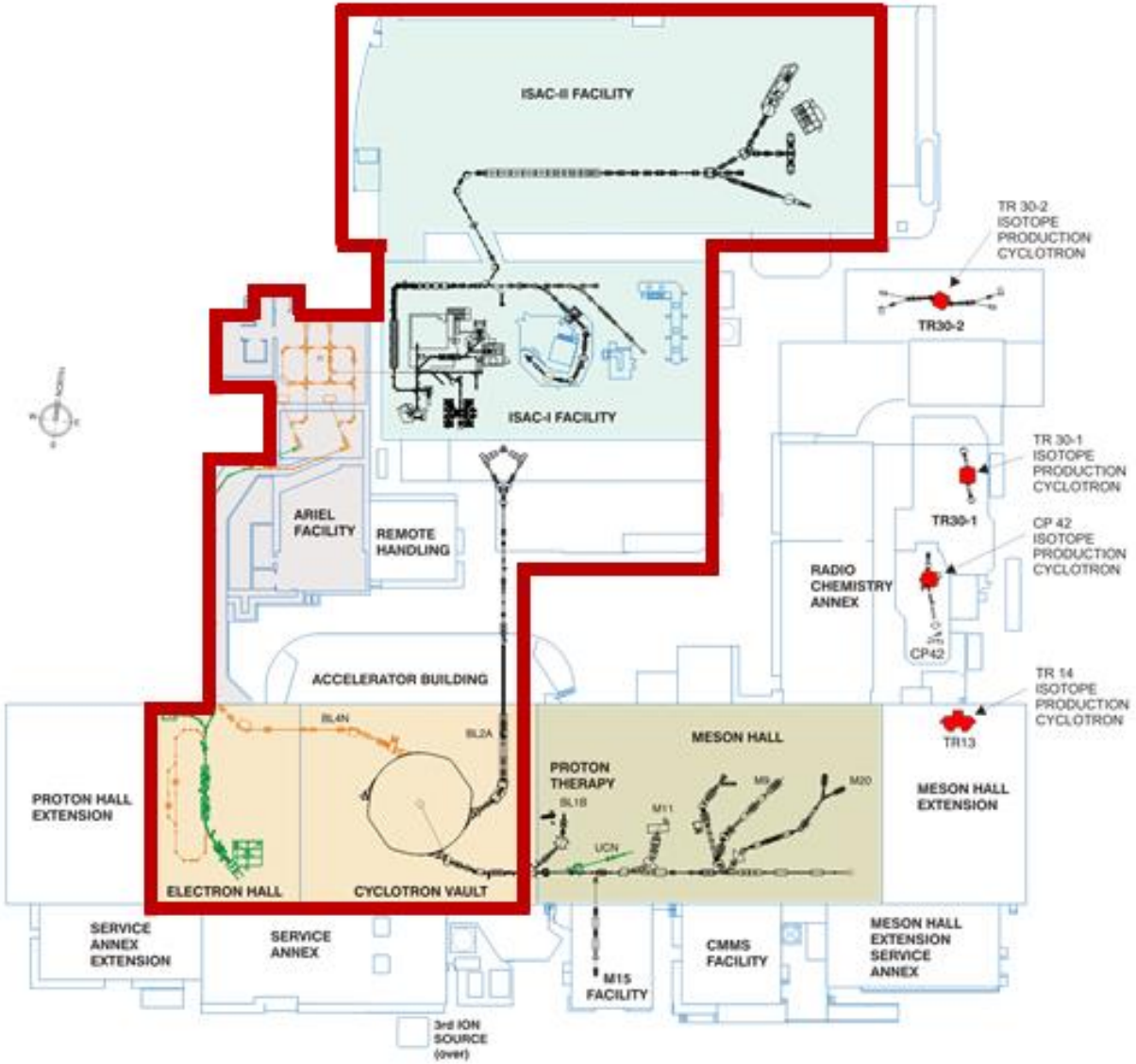

Completion of the ARIEL project

- Requires the target hall infrastructure for both stations
  (shielding, target building infrastructure, gas handling, HV infrastructure, vacuum systems)
- Target and RIB modules and beam dumps including the medical target and transfer system to the hot cell.
- Beam line 4 North (BL4N) and the electron beam line

- Required for the ramp up in operation :
  - Spent target decay storage vault
  - Target production infrastructure (laboratories)
  - Offline target acceptance stand – TISA completion
  - HV infrastructure for APTW
  - E-linac upgrade to full performance
  - CANREB operation (EBIS, RFCB and HRS)

Hot cell facilities consisting of maintenance cell and target disposal cell

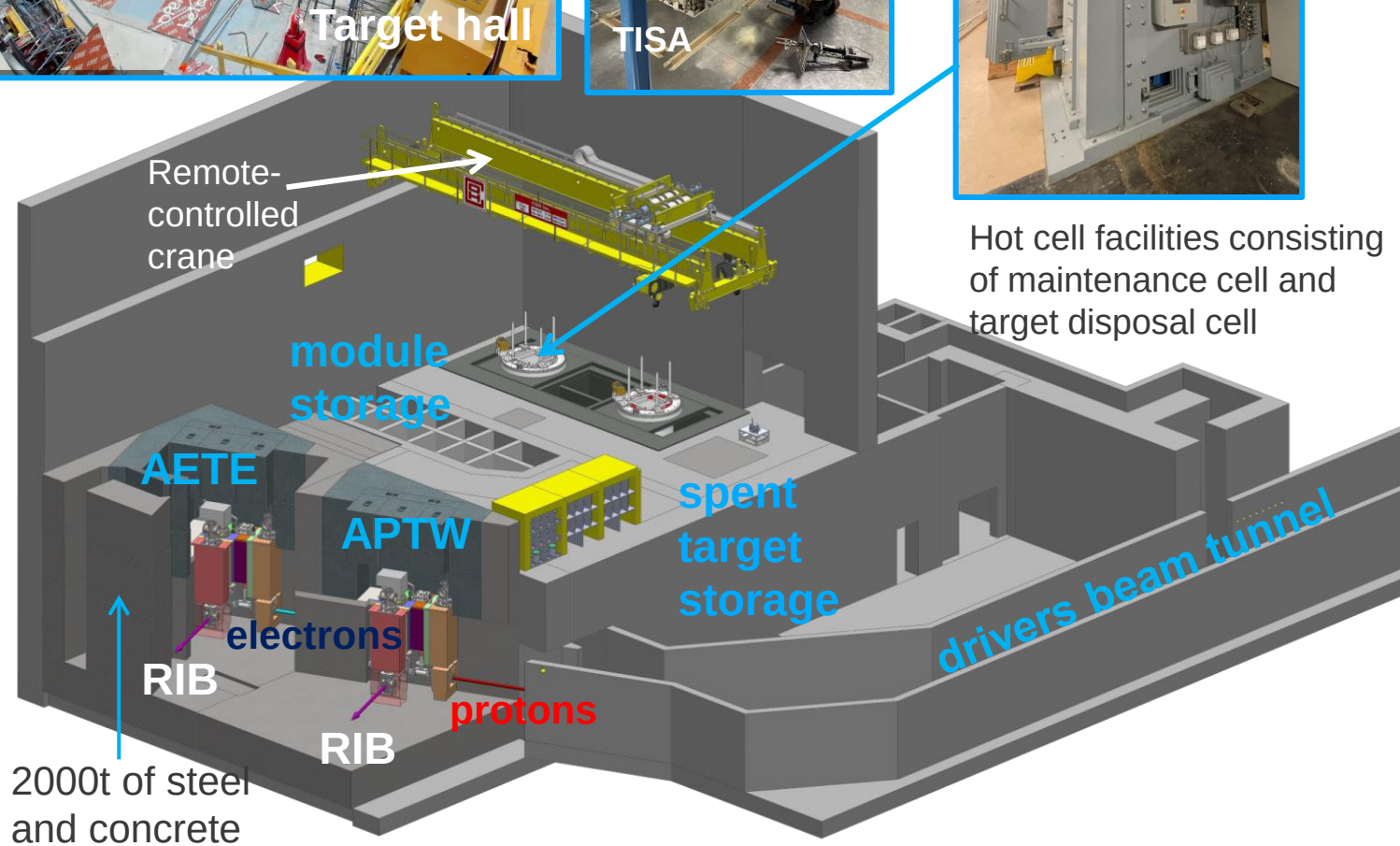

Recent progress highlights (1)

- Hermetic target vessel (HTV) assembly completed
- **Target & Ion source front end** assembled in the lab and aligned; APTW Target Ion Source Front End assembly complete and placed into hot cell for remote handling validation tests.
- Target Pit shielding construction & concrete pours – more layers completed
- RIB transport modules – staging (in ISAC-I) and assembly readiness

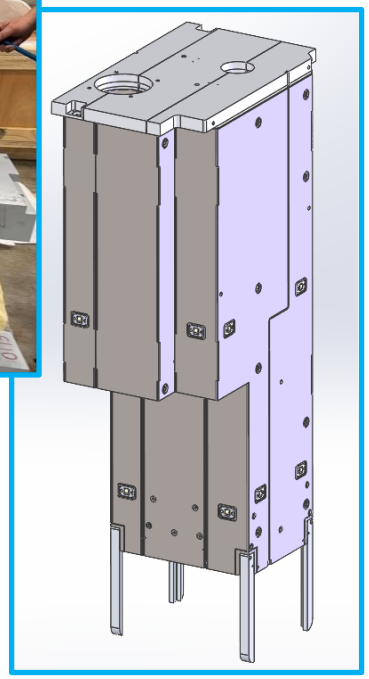

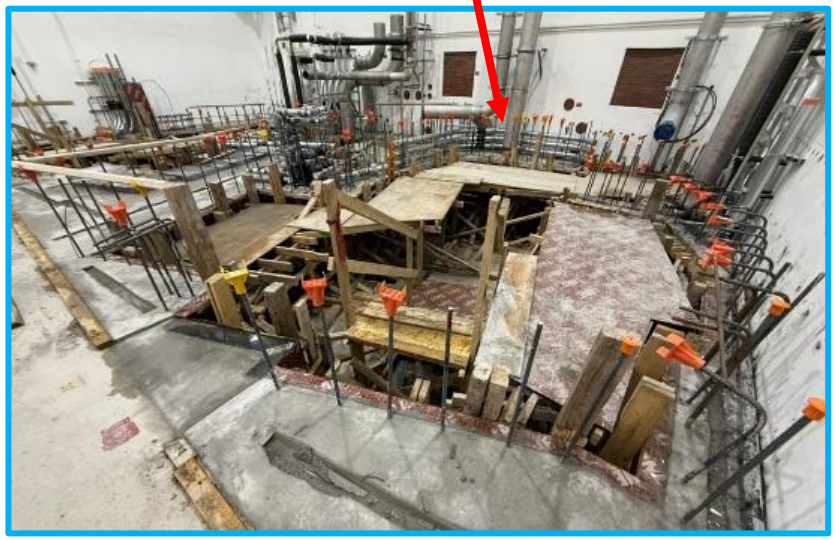

Recent progress highlights (2)

- New proton beam line (BL4N) extraction and section in the 520 MeV cyclotron vault are completed.
  Also the collimator section in the so-called proton cave has been installed.
- **Target & Ion Source Acceptance (TISA) test stand front end** has been rebuilt and completed
- CANREB High Resolution Separator (HRS) tested with world-record mass resolving power

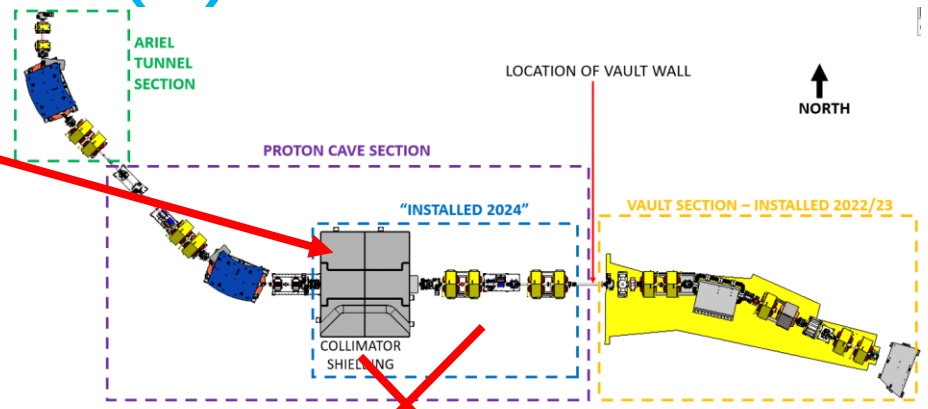

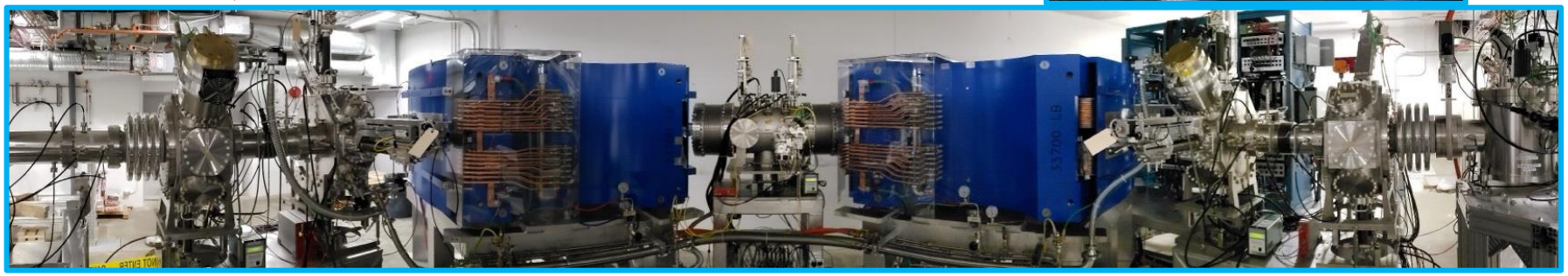

Planning towards ARIEL operation – Long shut down 2026 (LS26)

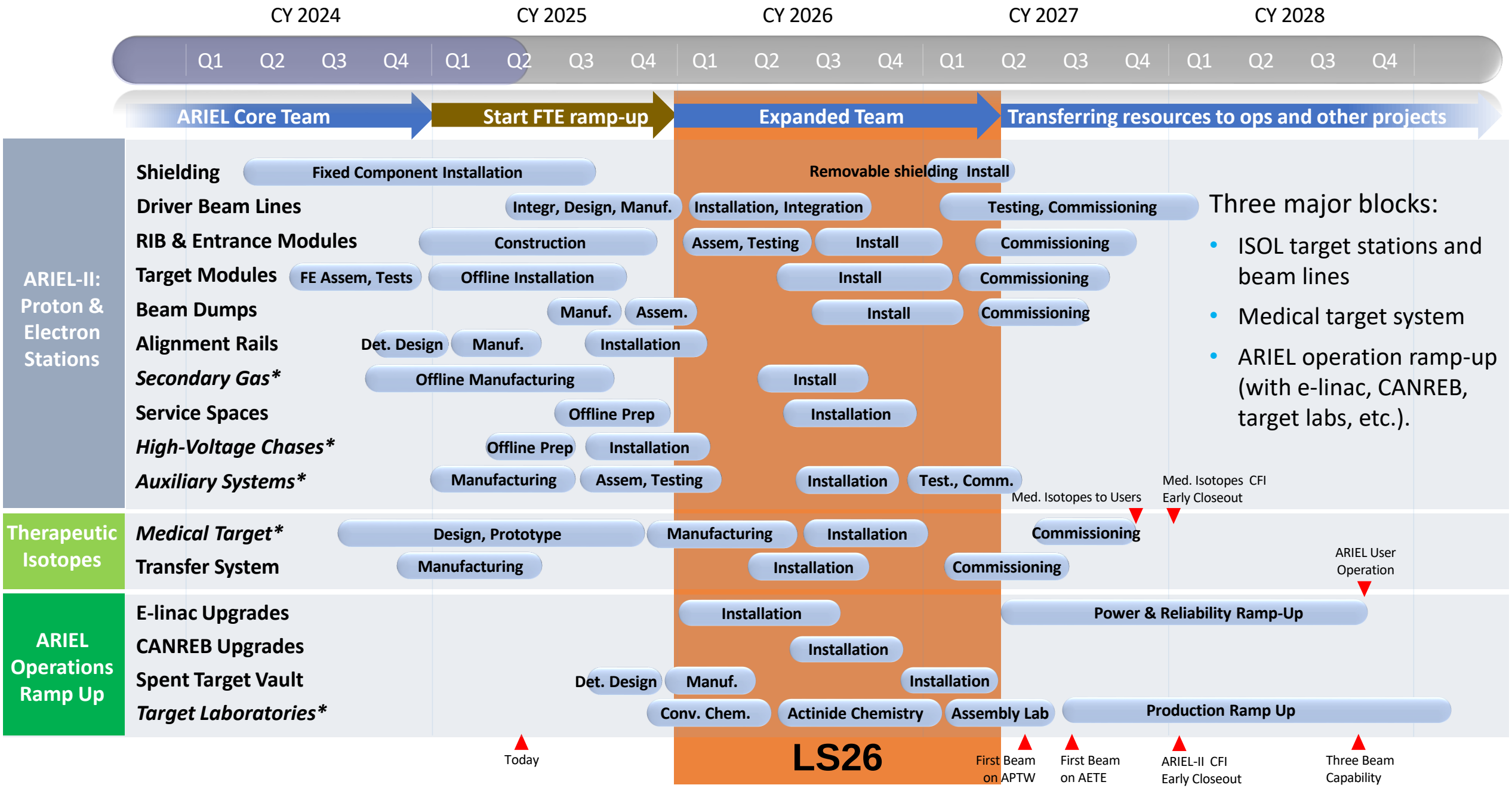

Towards the completion of ARIEL

Thank you
Merci

www.triumf.ca

Discovery, accelerated

HL-LHC crab cavity cryomodule project status

- **All material ordered, and parts will be received before end of this month.**
- First prototype RFD cavity was received from JLab and requalification test was successful – all new test infrastructure worked very well!
  Warm and cold measurement results matched all JLab results → the cavity was then conditioned to a higher performance – ready for series testing!
- New clean room commissioned and cryomodule assembly equipment prepared.

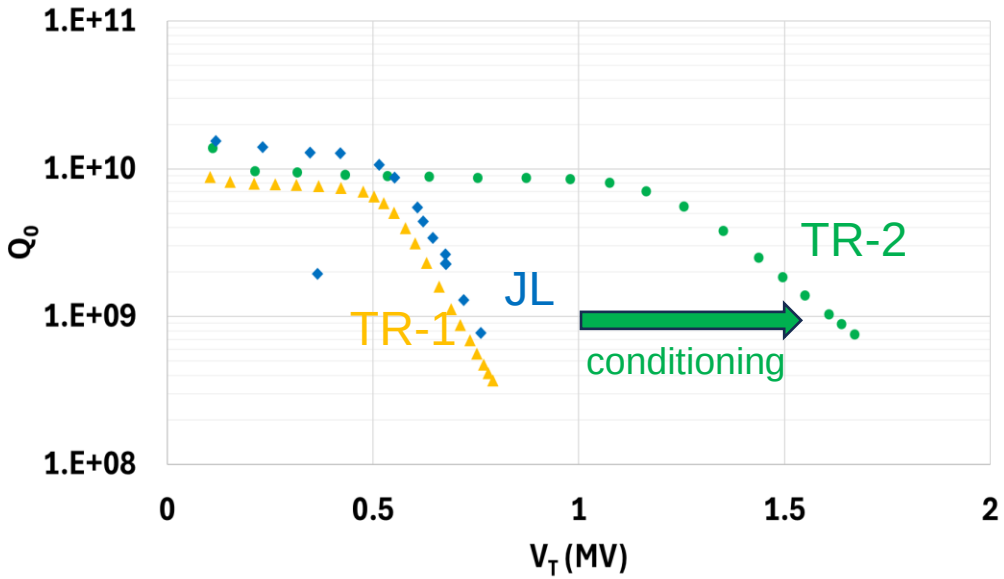

Accelerator refurbishment in 2025-2030

- Cyclotron RF reliability improvement
  → short term Intermediate Power Amplifier (IPA)
- Cyclotron Control System (CCS) upgrade (short term)
  → TRIUMF Control Centre (end of the 5YP)
- BL1A refurbishment (major deliverable)

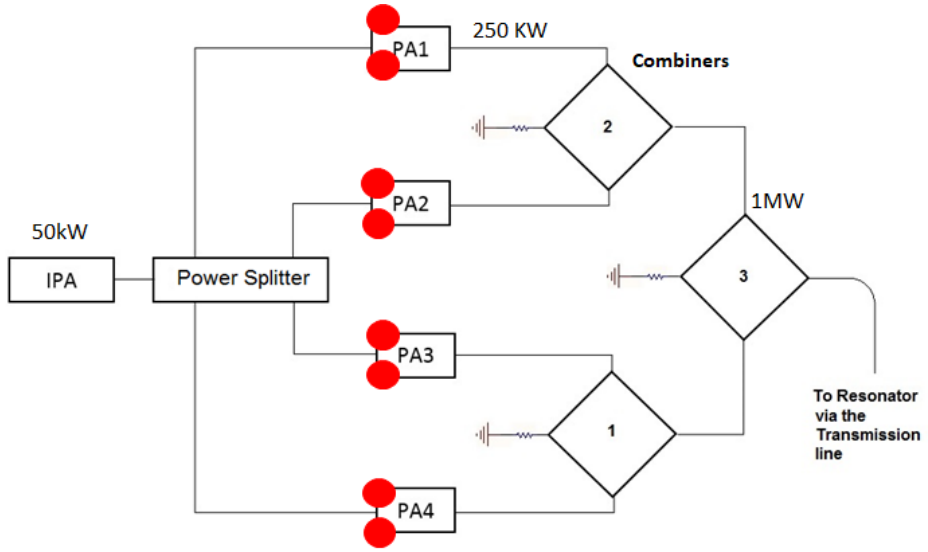

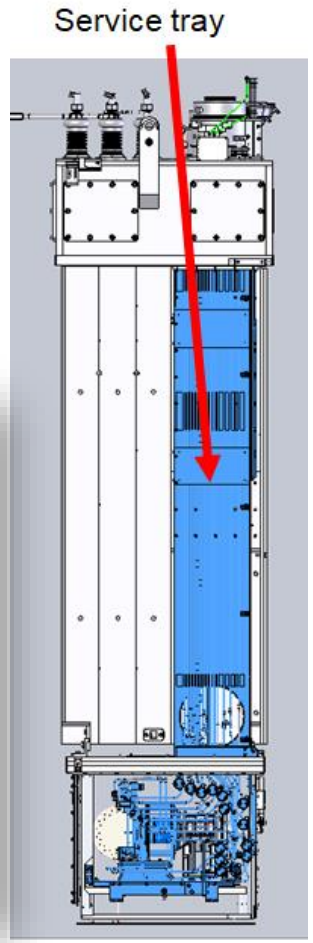

From 2027 on (preparation for higher beam intensity operation):

- Replacement of old beam line 2A (ISAC) and 1A power supplies
- Cyclotron (Inflector upgrade, beam instrumentation, cryopumps and preparation of LINDE-1630 cryoplant replacement) and further Cyclotron RF refurbishment.
- Remote handling infrastructure, waste disposal preparation and tooling
- ISAC target module (TM) 2 and 4 refurbishment
  (Based on the successful refurbishment of TM3
- ISAC-I RF system (Solid State Amplifiers and LLRF)
- RIB delivery improvements including upgrade of beam diagnostics and ion sources
- TRIUMF resonance laser ion sources TRILIS upgrade

BL1A project scope

Redefined refurbishment project

1. Removal and onsite storage of old T2 collimator and Triplet Quadrupoles
2. Build of new replacement collimator and associated remote handling tools
3. Purchase of 3 or 4 new quadrupole magnets, and build of necessary vacuum chamber, alignment stands, etc.
4. Installation of new collimator and new quadrupole lenses and new shielding if required to accommodate new magnets
5. Integration and commissioning of new components (including cooling, beam diagnostics, controls, power supplies, etc.)

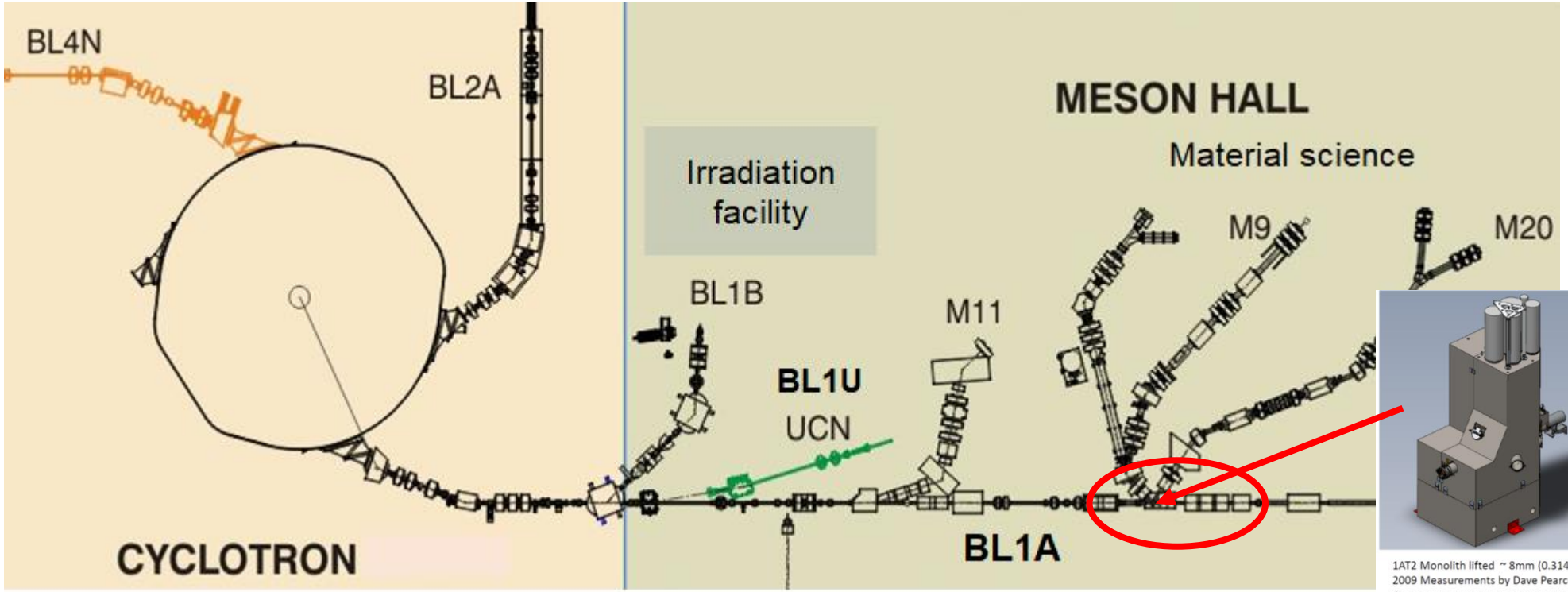

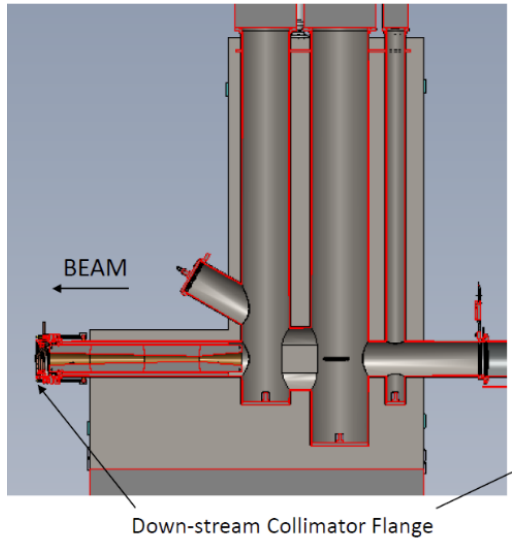

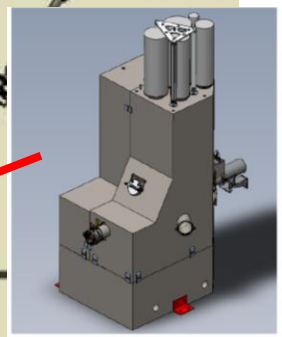

1AT2 Monolith lifted ~ 8mm (0.314")
2009 Measurements by Dave Pearce.
Compare to current measurements.

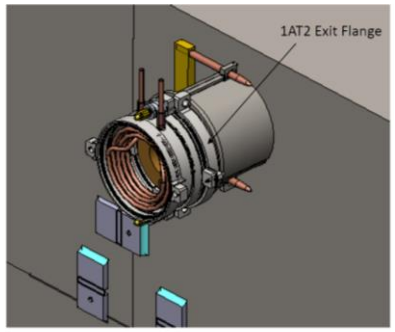

Collimator-B lifted ~ 0.30"
2009 Measurements by Dave Pearce.
New measurements to be taken.

Triplet replacement
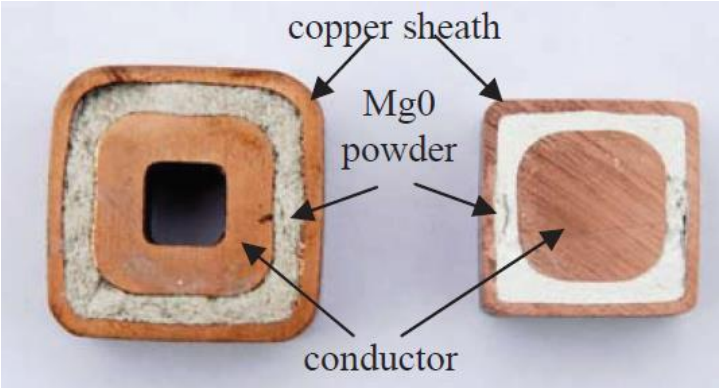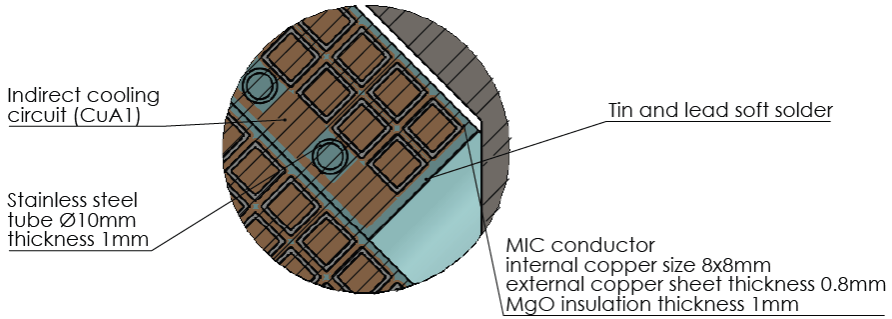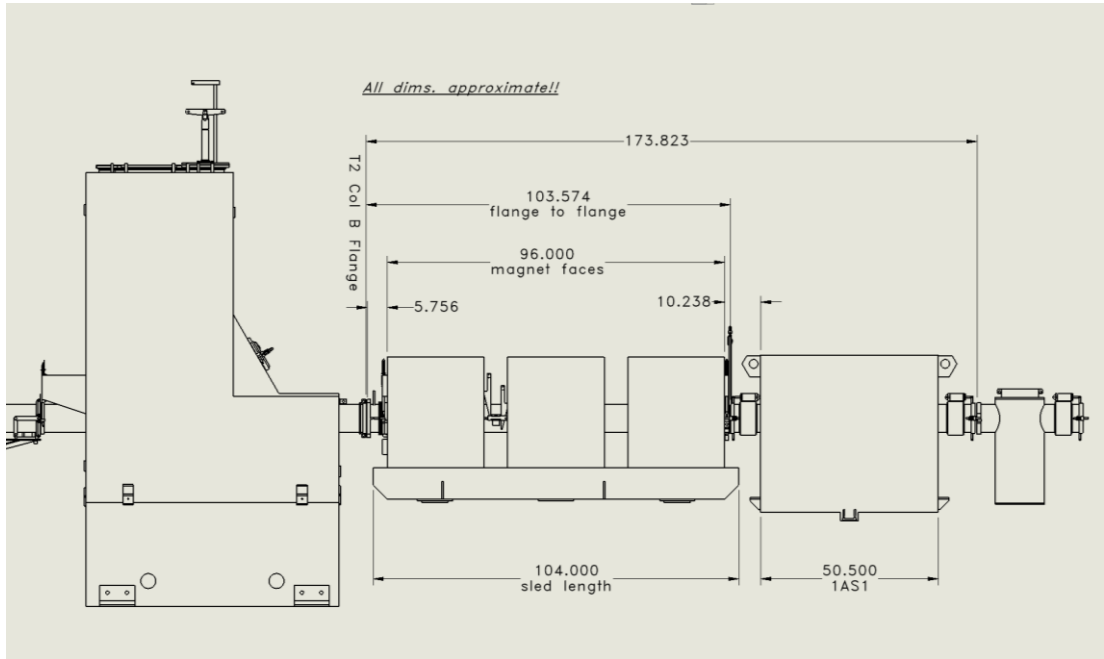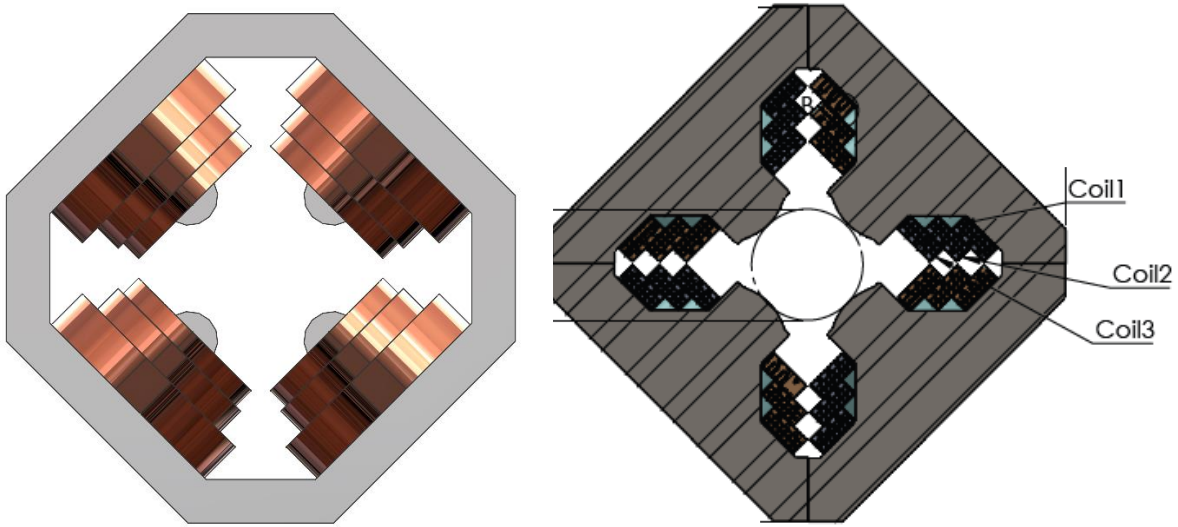
- Radiation hard magnets: mineral insulated conductor (MIC), indirect cooling of conductor in lead-tin solder
  → reduced clogging of cooling water channels
- Looked to several option for the replacement (double doublet or triplet) space only allows for a triplet, which is a solution according to beam optic simulation → vendors are contacted for quotes.
- The triplet production and delivery is on the critical path of the project, which need to be completed by July 2027!