Imaginarity as a necessary resource for trainability in QAOA

Syed Muhammad Ali Hassan[1], Kostas Blekos[1], Stefan Kühn[2], Nikos Kollas[3], Karl Jansen[1,2]

The Cyprus Institute, Cyprus[1], DESY Zeuthen, Germany[2], University of Patras, Greece[3].

Motivation

- **Quantum computing** uses principles from quantum mechanics to potentially solve certain problems that classical computers find very hard or slow to handle.
- **Helpful in areas** like combinatorial optimization problems like Max-Cut[1].
- **Resource** for quantum computing is quantum imaginarity.
- **Imaginarity** creation and detection in different quantum algorithms.
- **How** to manage and analyze Quantum imaginarity in quantum systems.
- **Goal** is to strengthen quantum computing by preserving and utilizing imaginarity.

I. Quantum Approximate Optimization Algorithm (QAOA)

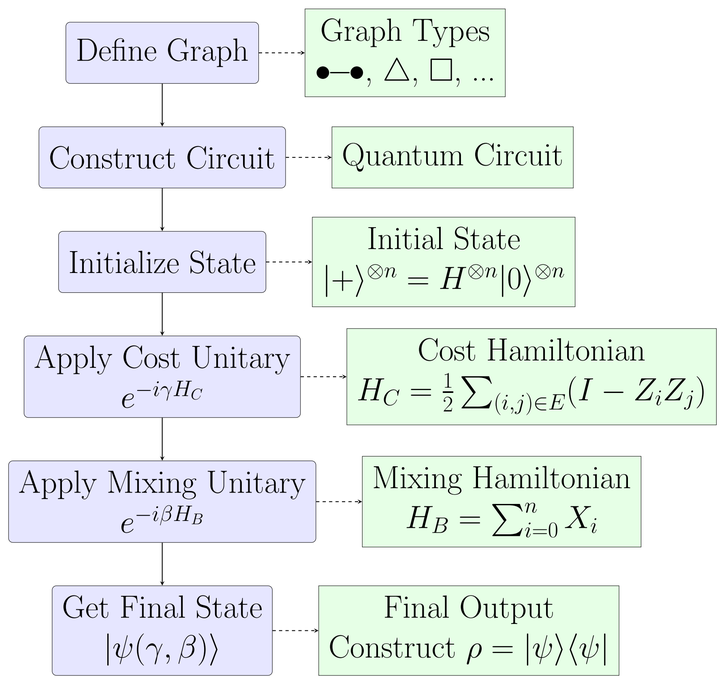

II. QAOA Circuit

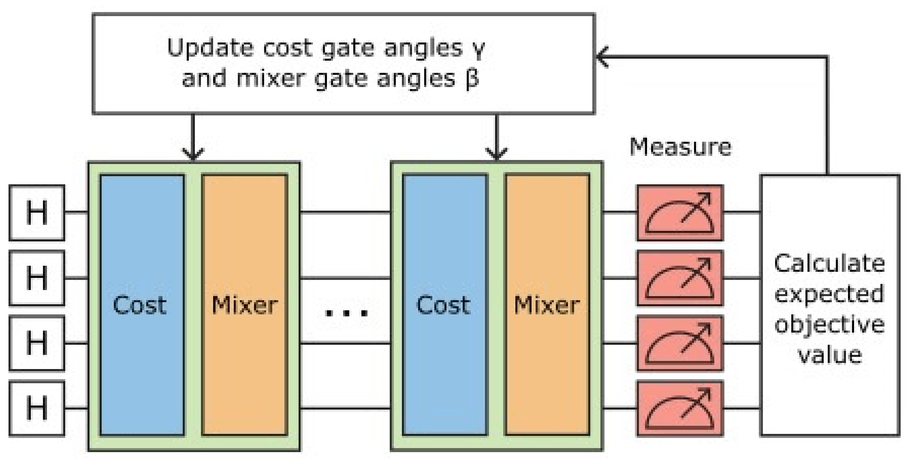

III. Resource Theory Fundamentals

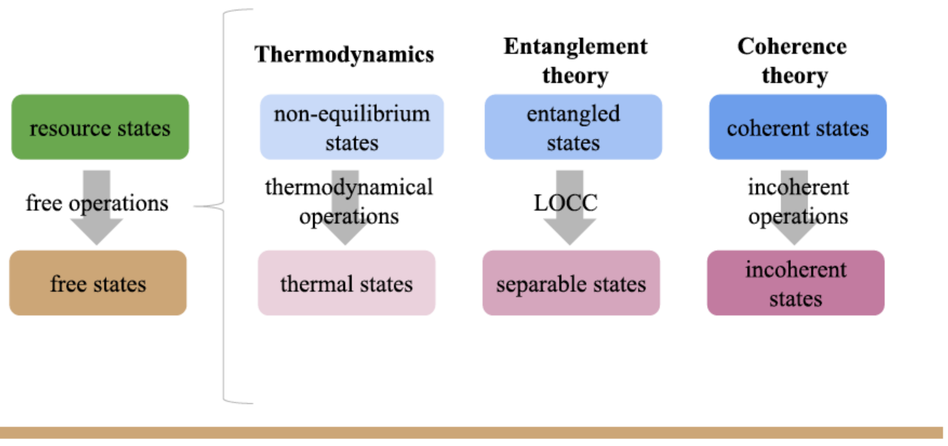

IV. Imaginarity

- A density operator ρ on a d-dimensional Hilbert space $\mathcal{H}$ with orthonormal reference basis $\{|z\rangle\}_{z=0}^{d-1}$,

$$\rho = \sum_{z,z'=0}^{d-1} \rho_{zz'}|z\rangle\langle z'|. \tag{1}$$

We say that ρ is real, or free, if $\rho_{zz'} \in R$ for all z, z'. States with nonzero imaginary off-diagonal elements are resourceful.

- ***ℓ_1-norm of imaginarity***
The sum of the absolute values of the imaginary parts of the off-diagonal elements defines a measure of imaginarity,

$$I_{\ell_1}(\rho) = \sum_{z\neq z'} |\mathrm{Im}\,(\rho_{zz'})|\,, \tag{2}$$

known as the ℓ_1-*norm of imaginarity* [2].

V. Bounds

- **Mixer-gradient identity**
For a diagonal cost Hamiltonian and a real mixer,

$$\partial_\beta F = -\sum_{(\mathbf{z},\mathbf{z'})\in\mathcal{S}_B} (C_\mathbf{z} - C_\mathbf{z'})(H_B)_{\mathbf{z}\mathbf{z'}}\,\mathrm{Im}(\rho_\beta)_{\mathbf{z}\mathbf{z'}}. \tag{3}$$

A pair of candidate solutions may contribute to the derivative only when they are connected by the mixer, their objective values differ, and their coherence has a nonzero imaginary part. If all imaginary coherences vanish, then the derivative vanishes; the converse need not hold since different contributions may cancel.

- **For noisy operations**
With an incoherent adjoint

$$|\partial_\beta F_\lambda| \leq B^{(\lambda)}_{\mathrm{adj}}(\rho_\beta), \tag{4}$$

where

$$B^{(\lambda)}_{\mathrm{adj}}(\rho_\beta) = \sum_{(\mathbf{z},\mathbf{z'})\in\mathcal{S}_B} |C^{(\lambda)}_\mathbf{z} - C^{(\lambda)}_\mathbf{z'}||(H_B)_{\mathbf{z}\mathbf{z'}}|\,|\mathrm{Im}(\rho_\beta)_{\mathbf{z}\mathbf{z'}}|. \tag{5}$$

- **Weighted adjoint-channel bound**
We call $B^{(\lambda)}_{\mathrm{adj}}(\rho_\beta)$ the weighted adjoint-channel bound. It combines the mixer-edge imaginarity of the state before terminal noise with the noise-modified cost differences of $H_C^{(\lambda)}$.



Future Directions

- Increase the system size.
- Analyze different coherence measures.
- Robustness of coherence.
- Relative entropy of coherence
- The performance of the different algorithms.

References

[1] Edward Farhi, Jeffrey Goldstone, and Sam Gutmann. *A Quantum Approximate Optimization Algorithm*. 2014. arXiv: 1411.4028 [quant-ph]. URL: https://arxiv.org/abs/1411.4028.

[2] Qiang Chen, Ting Gao, and Fengli Yan. "Measures of imaginarity and quantum state order". In: *Science China Physics, Mechanics amp; Astronomy* 66.8 (2023). ISSN: 1869-1927. DOI: 10.1007/s11433-023-2126-9. URL: http://dx.doi.org/10.1007/s11433-023-2126-9.

Acknowledgement

This project has received funding from the European Union's HORIZON research and innovation programme HORIZON-WIDERA-2022-TALENTS-01 under grant agreement No. 101087126.

Funded by the European Union

Republic of Cyprus

AQTIVATE

LaTeX TikZposter