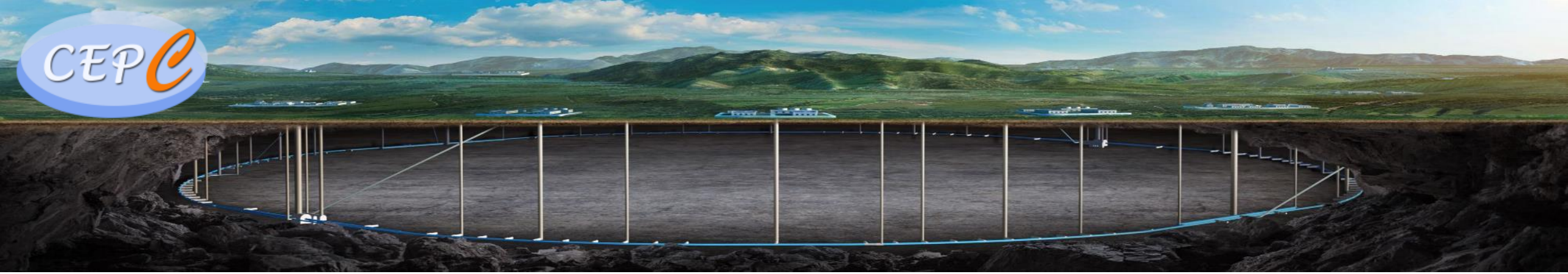

# CEPC Mechanical system and mockups

Haijing Wang
IAS Program on Fundamental Physics (FP 2026)
Jan. 12– Jan. 16, Hong Kong

中国科学院高能物理研究所
Institute of High Energy Physics
Chinese Academy of Sciences

# Content

- Introduction
- CEPC EDR layout progress
- Tunnel mockup progress
- MDI mechanics progress
- Vibration test scheme
- Summary

# Introduction

- The mechanical system is engaging to make progress in EDR stage.
  - CEPC survey and layout
  - CEPC  tunnel mockup and high accuracy automatic adjusting and alignment system
  - MDI mechanics
  - Vibration test

# Introduction--EDR goal, scope and plans

| Items | 2024 | 2025 | 2026 | 2027 |
|---|---|---|---|---|
| CEPC equipment layout | ➢ Determine layout software and method<br>➢ Version 1 in arc section | ➢ Version 1 in other sections<br>Majority finished | ➢ Refinement and updating | ➢ Wrap up the unfinished work.<br>➢ Prepare the EDR report. |
| CEPC tunnel mockup | ➢ Finish the design, development and installation<br>Design finished | | | |
| High accuracy automatic adjusting and alignment system | ➢ Finish the design, development and the tests to fulfill the main requirements<br>Design finished | | ➢ Optimize the alignment method and support structure | |
| Vibration test | ➢ Finish the design<br>➢ Follow the geological exploration to do the tests<br>Design finished | | | |
| MDI layout | ➢ More detailed layout, identify the MDI interface dimensions<br>➢ The locations for additional BPMs<br>Finished | | | |
| Cryostat support design | ➢ More detailed support structure and FEA<br>➢ Design of auxiliary support<br>Optimize →mini review | | Vibration decreasing methods, eg. damping material | |
| RVC design | ➢ Mechanical design<br>➢ Prototype development and leak rate experiment<br>Design finished | | ➢ Structure optimization<br>➢ Finish the leak rate experiment | |

# CEPC EDR layout progress

- CEPC layout is one of the key tasks for CEPC in EDR stage
  - It makes the geometry of the accelerator physics to engineering layouts.
  - It serves as a bridge for communication and discussion between the mechanical system, accelerator physics system and multiple hardware systems, brings CEPC towards a more systematic and optimized direction.

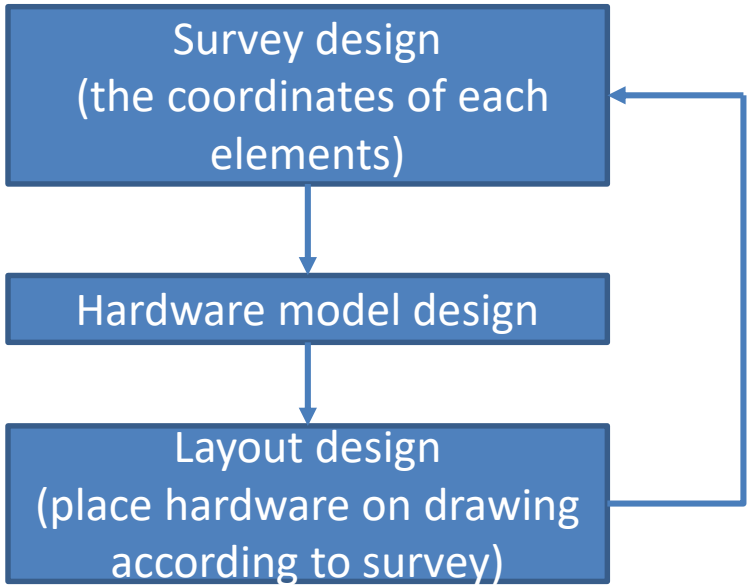


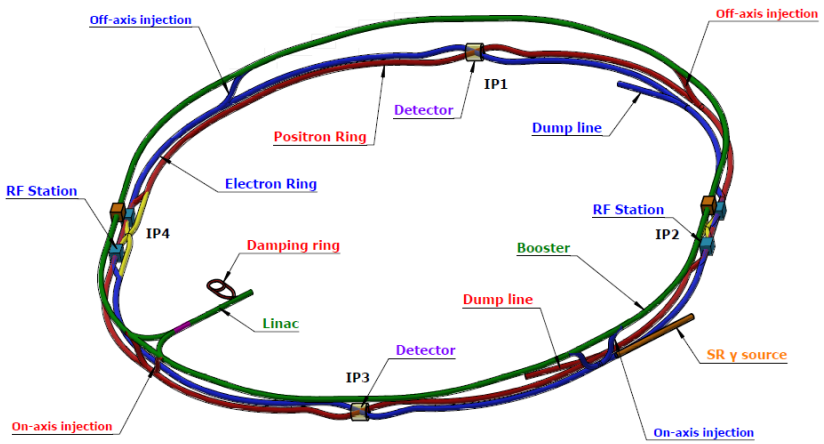

# CEPC EDR layout progress

## Milestones of CEPC layout design

**Before 2024.10**
- Preliminary vacuum layout for Collider and Booster
- Vacuum connection design for Collider and Booster

**2025.02**
- The circumference was updated to 99,955.418 meters
- Updated surveys (geometry) provided to Huadongyuan (for civil engineering design).

**2025.03**
- The realization of 2D/3D linkage design
- A collider layout demo of 276 m was made
- The issue of naming was raised

**2025.04**
- Confirmed the data format for accelerator surveys

**2025.05**
- Discuss the euipment lists
- Organise relative systems to conduct a systematic survey and layout design

**2025.06 to 2025.09**
- Regular meetings every week with all relative systems
- Hardware physical design completion rate: 86%, mechanical design completion rate: 51%

**2025.09 to now**
- Small-scale meetings with the unfineshed systems
- Hardware physical design completion rate: 93%

# CEPC EDR layout progress-overall

- CEPC is composed by Linac with the length of 1.6 km, damping ring with the circumference of 147 m, booster and collider with the same circumference of 99955.418 m*, 2 dumps and 14 transport lines. **, Dou Wang, Jie Gao, Jianchun Wang, et al., The CEPC Clock Issue and Finetuning of the Circumference. CEPC note.*
- The coordinate origins of all the accelerator has been unified. The (0,0) point is at the symmetric center of the Collider.
- The survey position accuracy reaches the micrometer level.

| Accelerator | Have EDR survey data? | Finish EDR survey design? | Have layout demo? | Complete survey naming? |
|---|---|---|---|---|
| Collider | √ | × note 1 | √ | × |
| Booster | √ | √ | √ | × |
| Linac | √ | √ | √ | √ |
| Damping Ring | √ | √ | √ | × |
| Transport lines | √ | × note 2 | × | × |

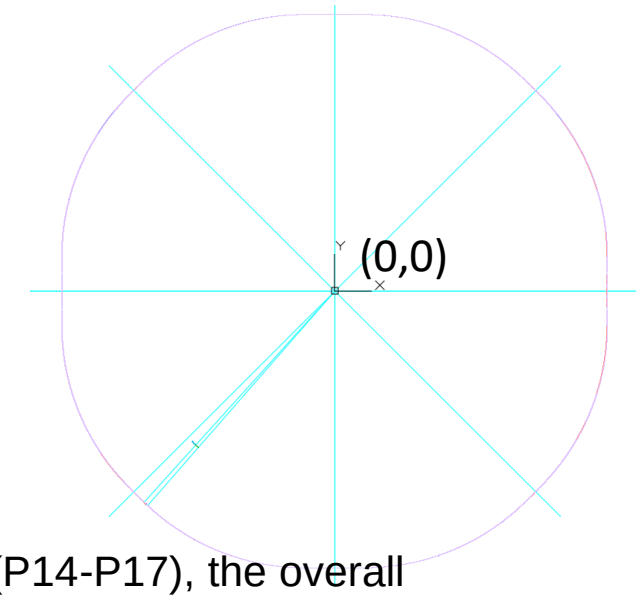


– note 1&2: Due to the iterative discussions and optimizations of some complex issues (P14-P17), the overall progress is currently slower than planned.

# CEPC EDR layout progress-hardware

| Accelerator | Hardware types * note1 | Hardware quantities | Progress (completed hardware types and completion rate) | | |
|---|---|---|---|---|---|
| | | | Have survey design | Have 3D physics design | Have 3D mechanical design |
| Collider | 53 (66) | 51756 | 46, 87% | 56, 85% | 31, 47% |
| Booster | 22 (30) | 40466 | 22, 100% | 29, 97% | 24, 80% |
| Linac | 66 (69) | 9690 | 66, 100% | 65, 94% | 18, 26% |
| Damping Ring | 10 (15) | 498 | 10, 100% | 15, 100% | 5, 33% |
| Transport lines | 46 (25) | 2758 | 44, 95% | 23, 92% | 14, 56% |
| INJ & EXT | 50 (27) | 186 | 32, 64% | 27, 100% | 27, 100% |

- note 1, No1. (No.2), the item numbers need survey (the total item types along beamline). The vacuum chambers are not included, because the detailed vacuum chambers design must be after the vacuum segmentation and layout definition.
- When are mainly focusing on some complex issue discussions recently. The types of hardware almost remain the same as Nov. 2025

Physics design progress from May to November, 2025

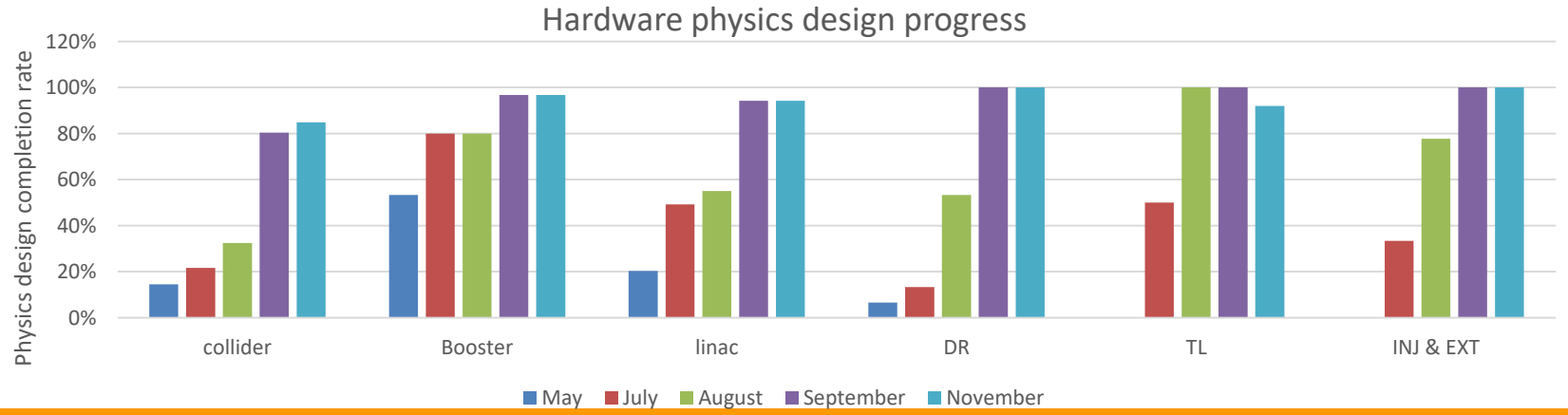

# CEPC EDR layout progress-hardware

- We are mainly focusing on hardware physics design at this stage, and when resources permit or necessity arises, we also undertake some mechanical design.

Physics design for some magnets

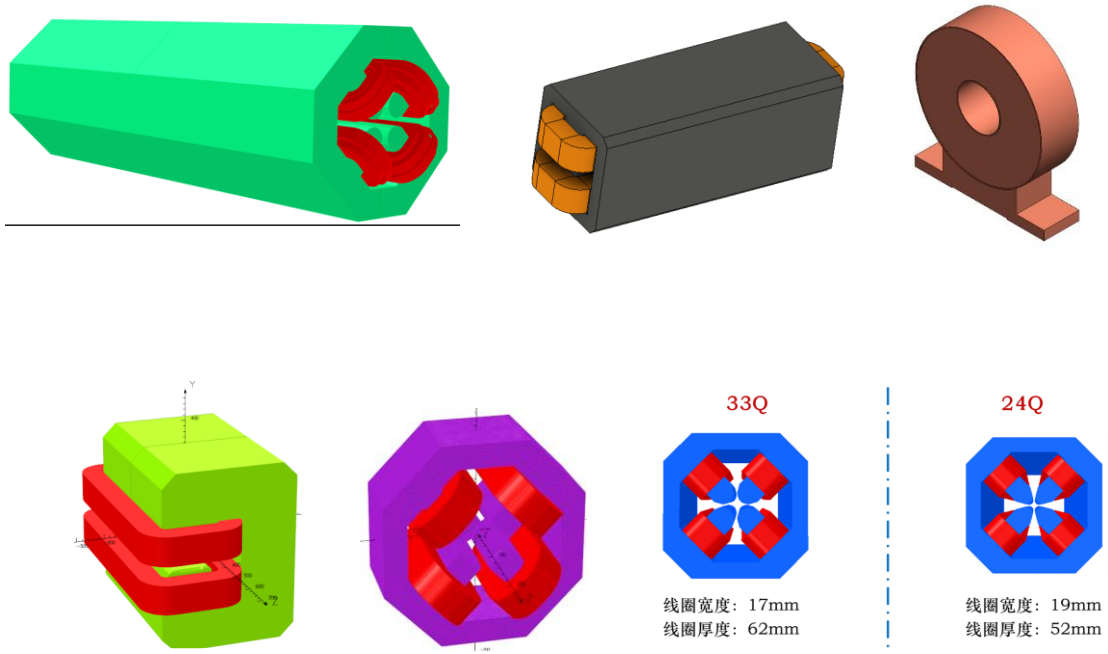


Mechanical design for some equipment

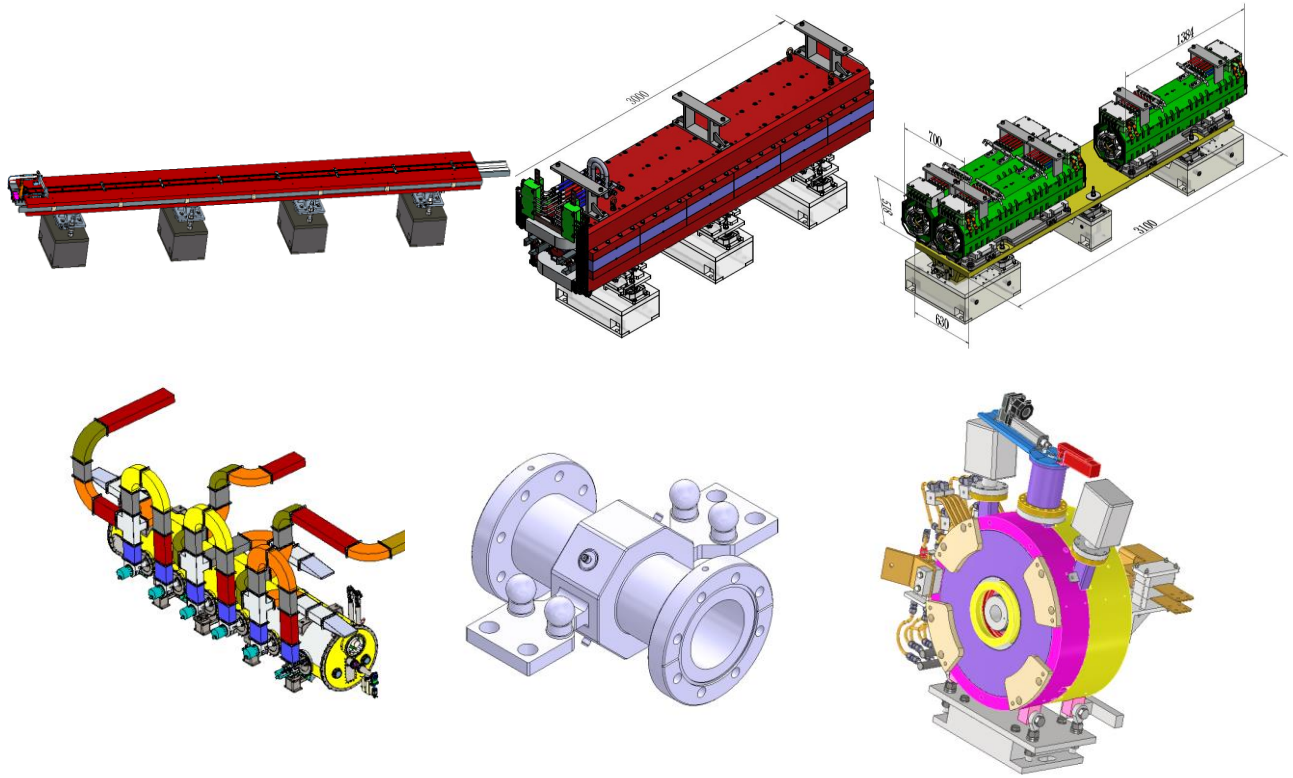

# CEPC EDR layout progress-Collider demo

- Collider layout demo (2D, arc section, 276 m)

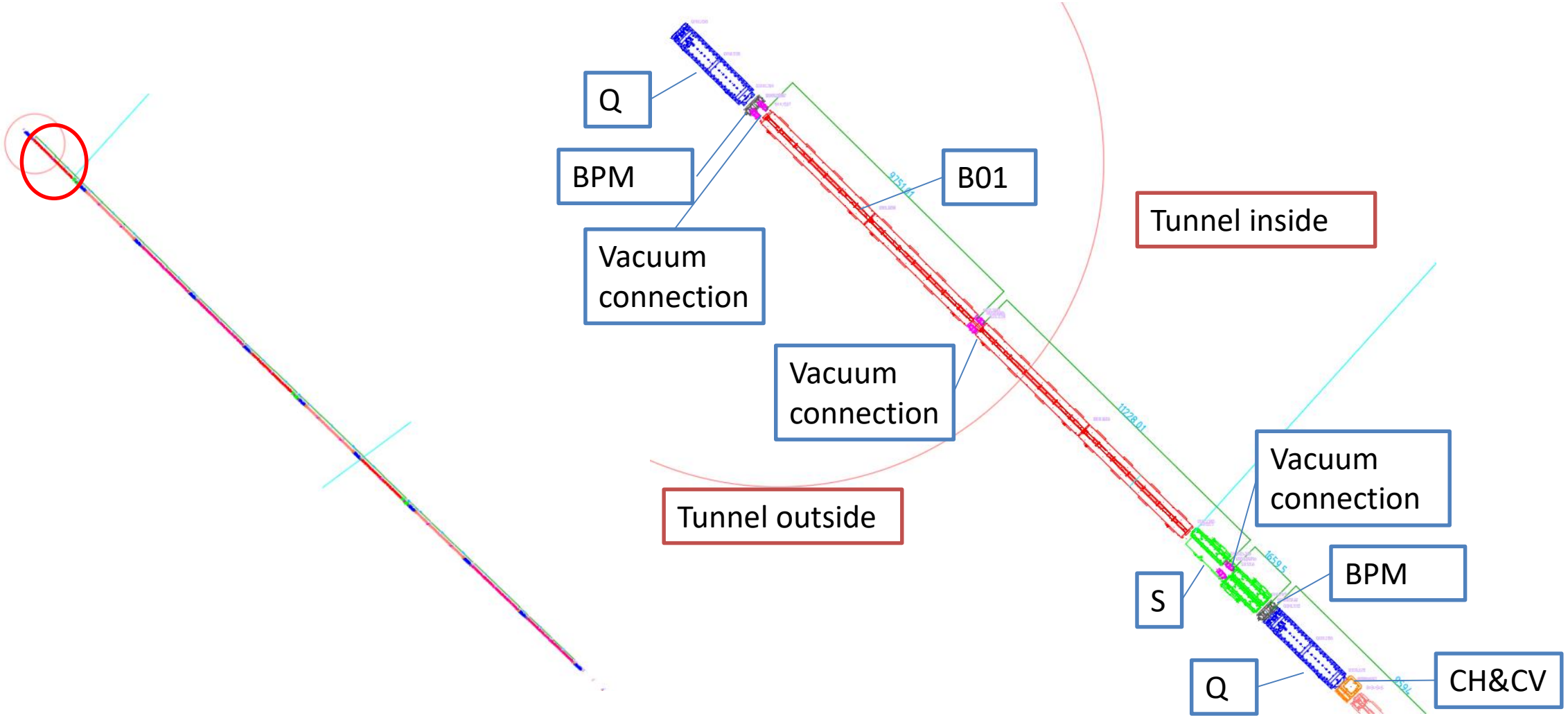

# CEPC EDR layout progress-Collider demo

- Collider layout demo (3D, arc section, 276 m)

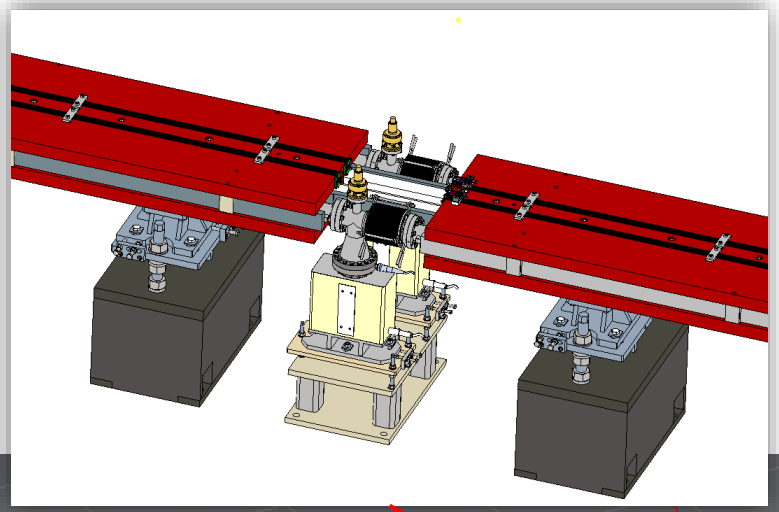

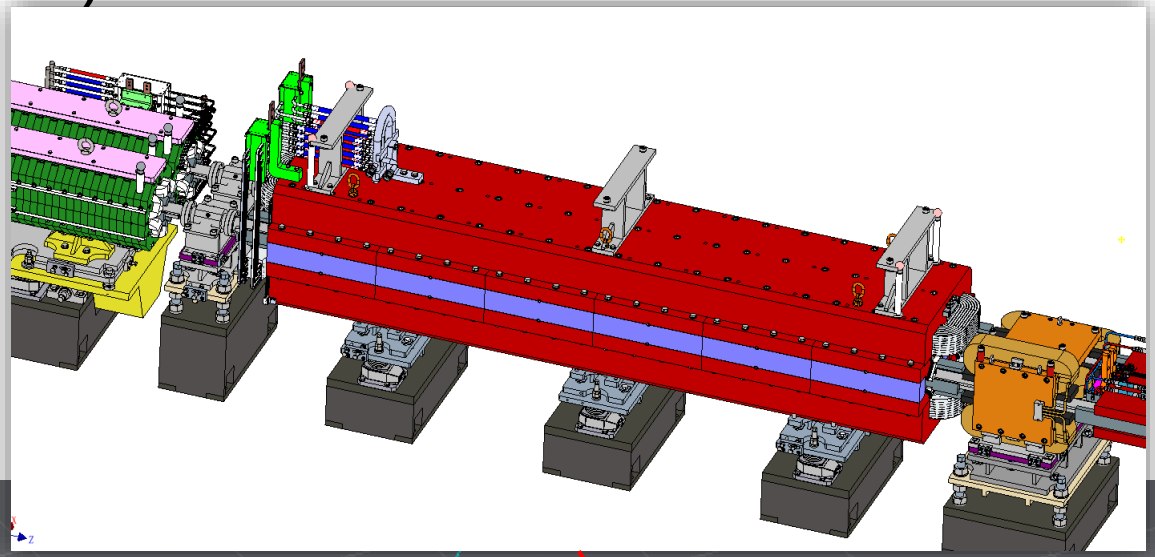

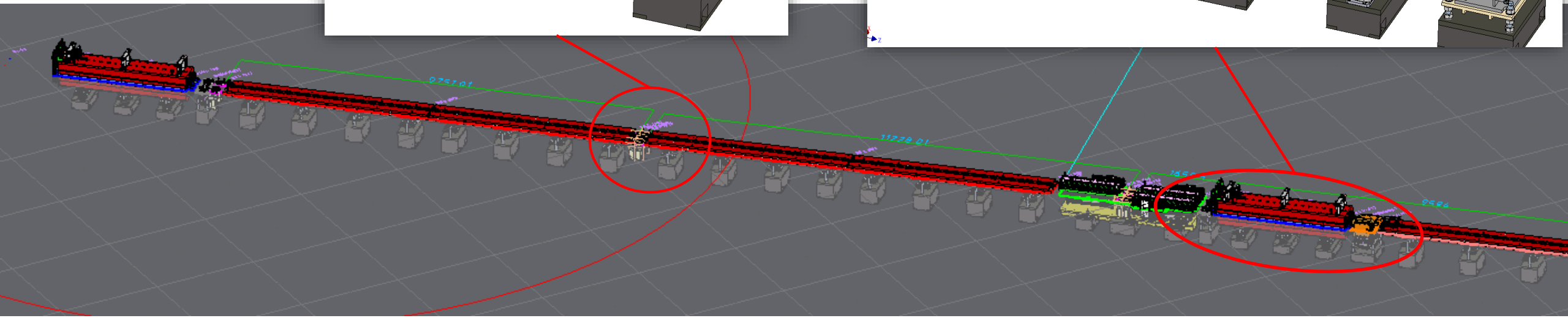

# CEPC EDR layout progress-Booster demo

- Booster layout demo (2D/3D, arc section, 230 m)

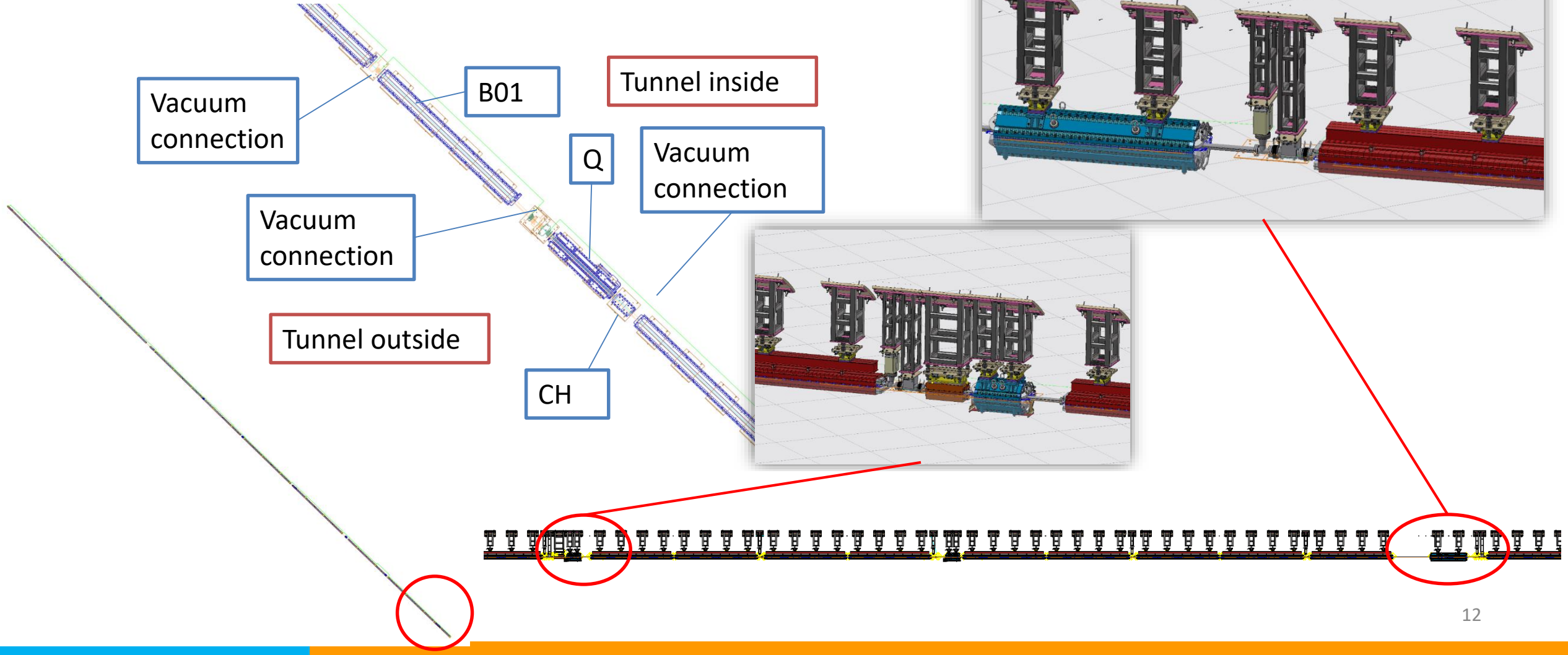

# CEPC EDR layout progress-Linac and DR demos

- Linac layout demo

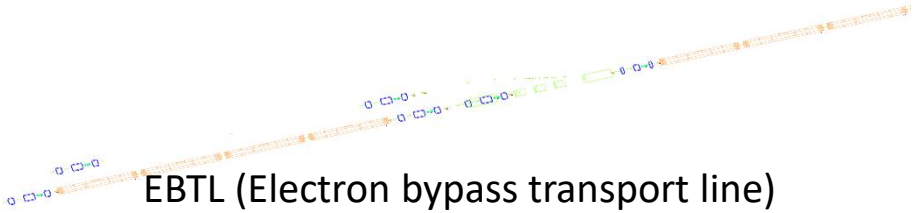

EBTL (Electron bypass transport line)
Up: 2D layout; Down: 3D layout

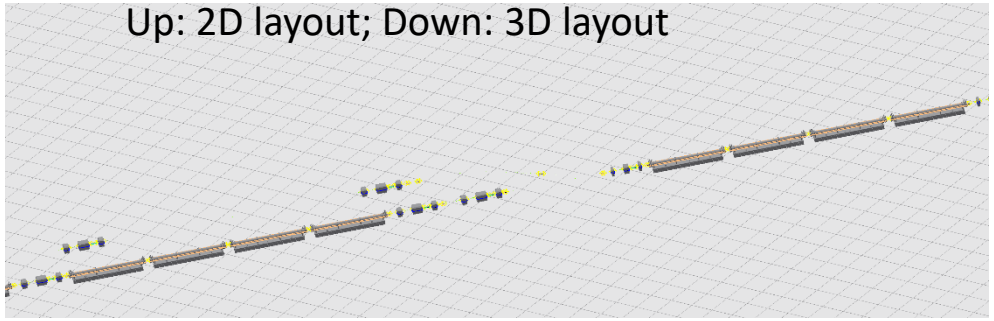

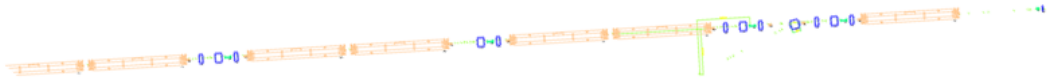

FAS (first accelerator section)
Up: 2D layout; Down: 3D layout

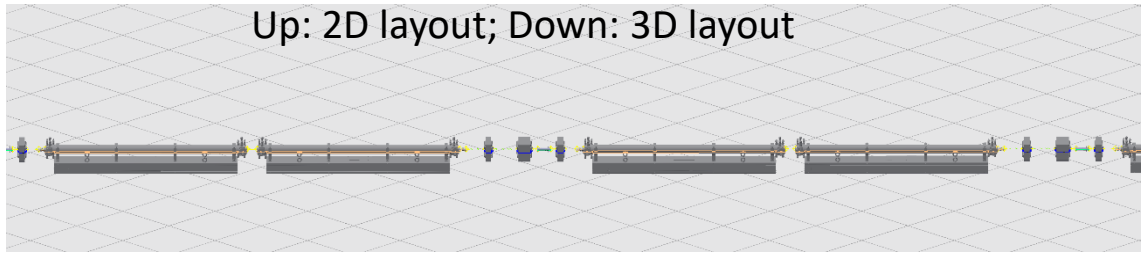

- Damping ring layout demo

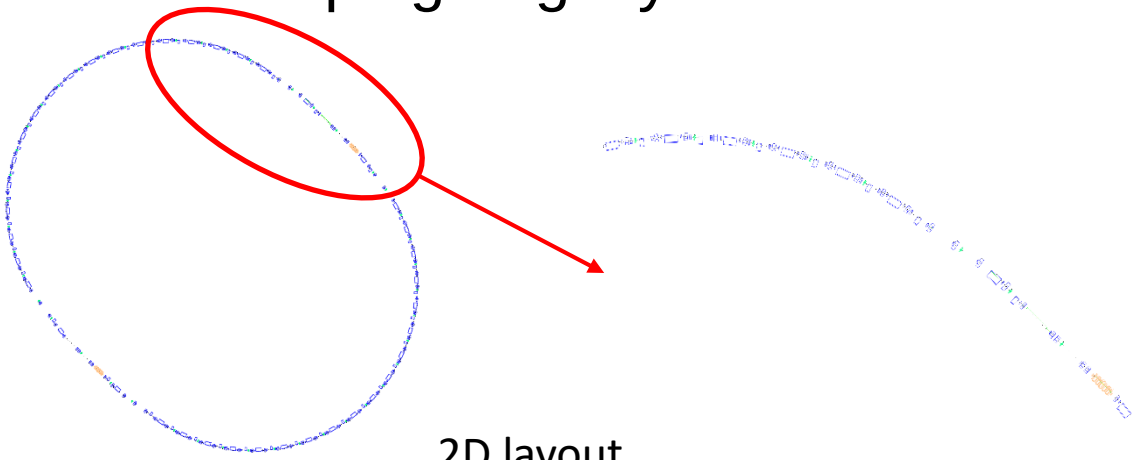

2D layout

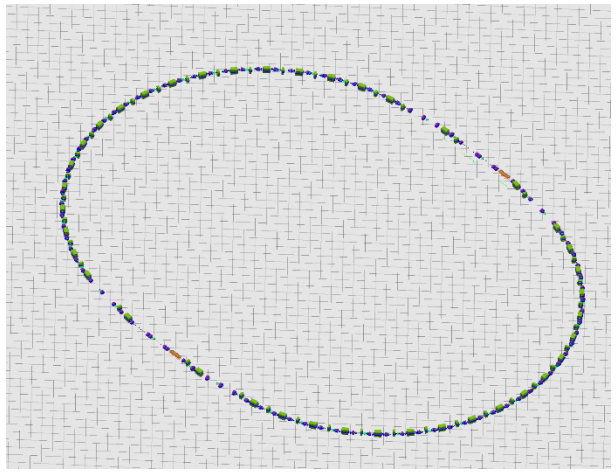

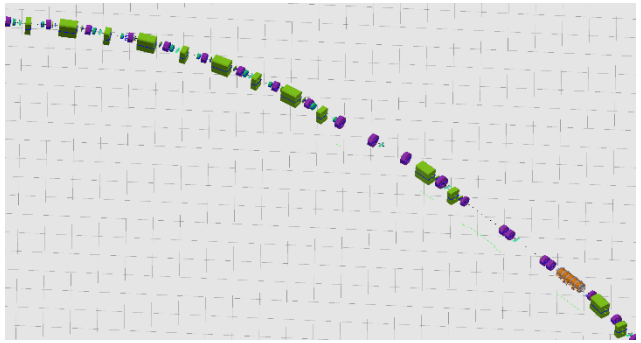

3D layout

# CEPC EDR layout progress-Main issues

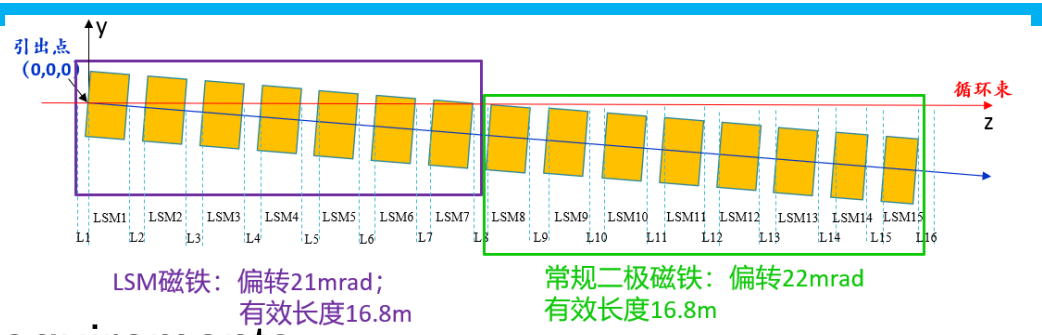


- 1: LSM or dipole?
  - Changed part of LSMs to regular dipoles
- 2: DUMP space interference in Linac→ solved
- 3: Different vacuum layout considering installation requirements
  - Three vacuum layout for Collider Haijing Wang, CEPC DAY, 25.5.23, https://indico.ihep.ac.cn/event/25992/
  - 3 vacuum layout for Booster, optimizing the installation method

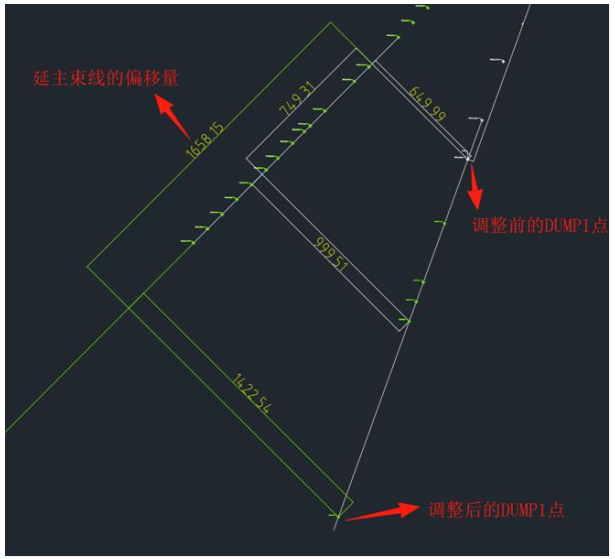


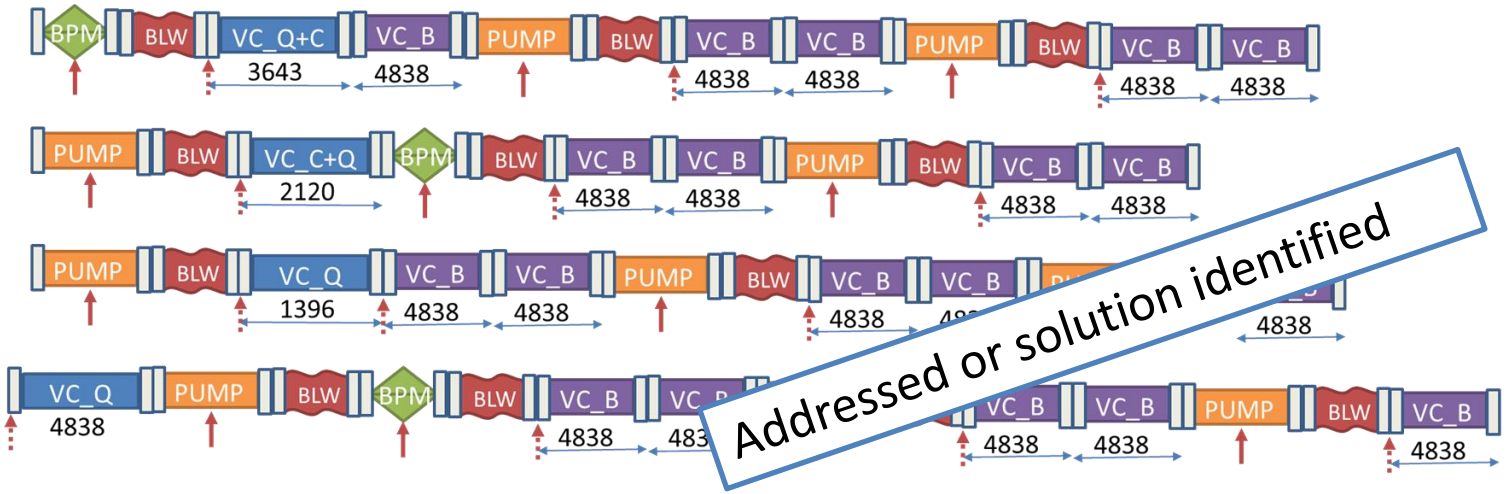

# CEPC EDR layout progress-Main issues

- 4. Collimators
  - Optimize design according to new lattice, update data formats
  - All collimators are located beside sextupoles (1.4 m available)
- 5. Quadrupole cross section optimization based on limited space.
  - Comparison on the deformation of magnet pole tip.

Collimator layout parameters and status

| Design lead | No. | Abbr | quantity | survey length (m) | Primary design parameters | 20250908 status survey 王毅伟 | physics design | 3D mechanical design | Remarks |
|---|---|---|---|---|---|---|---|---|---|
| 崔小昊 | 63 | CPX | 8 | 1 | half apeture 2-28mm | 1 | 1 | 1 | each ring has 4, two ring have |
| | 64 | CPY | 8 | 1 | half apeture 2-28mm | 1 | 0 | 0 | each ring has 4, two ring have |
| | 65 | CPM | 8 | 1 | half apeture 2-28mm | 1 | 0 | 0 | each ring has 4, two ring have |
| | 66 | CBX | 18 | 1.4 | half apeture 4-28mm | 1 | 1 | 1 | each ring has 9, two ring have |
| | 67 | CBY | 20 | 1.4 | half apeture 3-28mm | 1 | 0 | 0 | each ring has 10, two ring have |

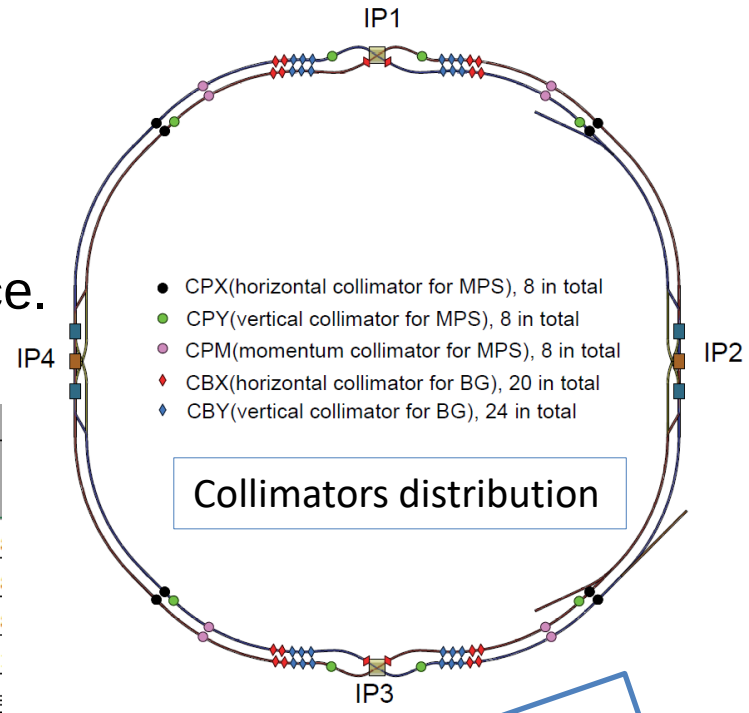


Collimators distribution

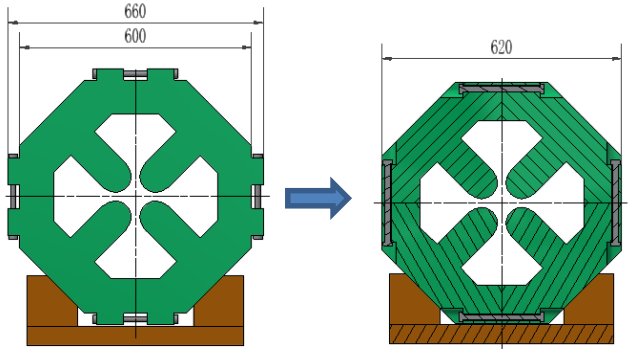


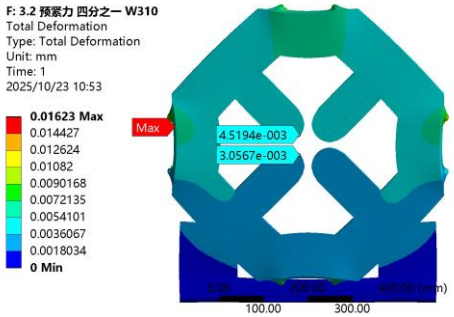


Quadrupole cross section optimization

Addressed or solution identified

# CEPC EDR layout progress-Main issues

- 6: IP sextupoles
  - Two kinds of sextupoles are changed to SC magnets, from TDR to EDR, with a quantity of 32.
  - Preliminary longitudinal layout and cryostat design has been identified.
- 7: IP multi-magnets
  - Three kinds of sextupole-quadrupole combined magnets.
  - Through many negotiations on the space, magnet parameters and materials, a preliminary consensus has been reached out to proceed with detailed magnet physics design.

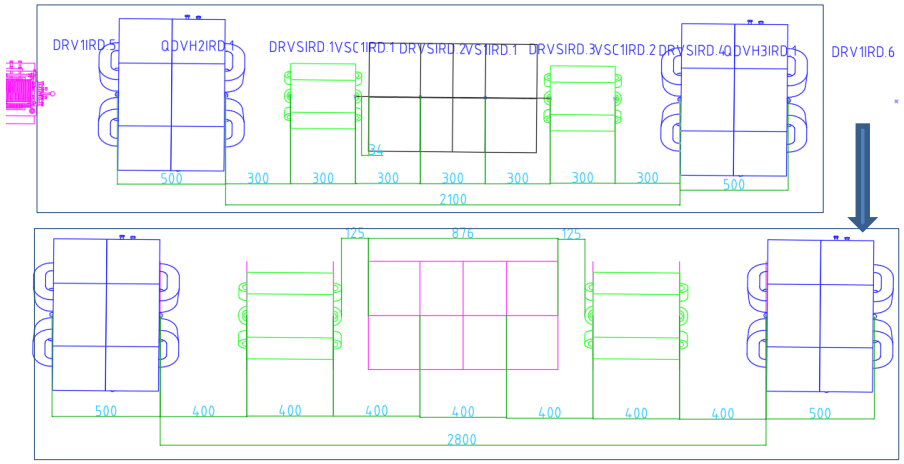


Preliminary longitudinal layout optimization

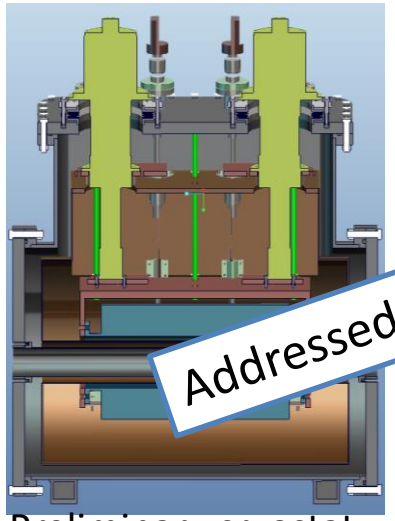

Addressed or solution identified

Preliminary cryostat design of IP SC sextupoles

# CEPC EDR layout progress-Main issues

- 8: Spatial interference issues within 1.5 km of IP
  - Spatial interference resolution has been carried out with optimizations of magnet dimensions, accelerator physics, and magnet parameters.
  - Several design iterations have been conducted, but a finalized issue-free version has not yet been achieved.
- 9: Space arrangement at RF section, 3 beam lines.
  - Bypass design and space arrangement with the tunnel are still under design.

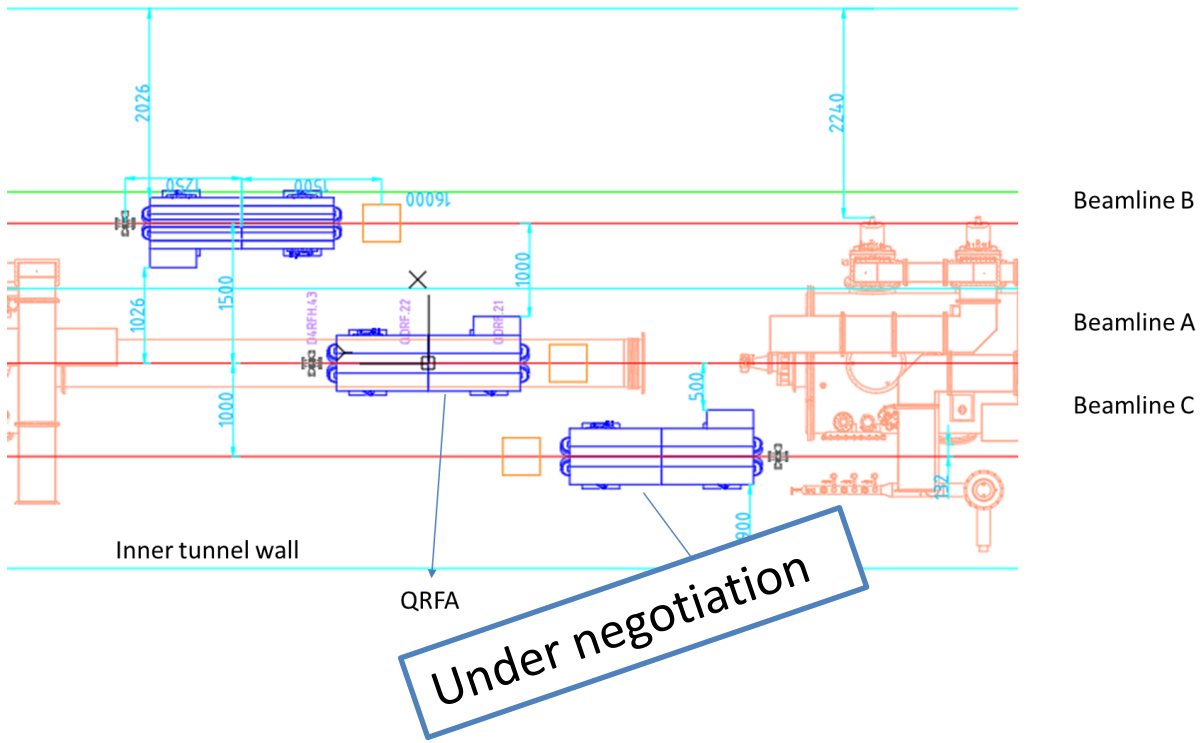


We have a working group and regular meetings to propose the design and solve the issues we confront when working on the layout. The overall work is evolving toward detailed engineering discussions and design.

# CEPC EDR layout progress-Integration method

- 2D and 3D layouts of CEPC are being built synchronized.
  - Less workloads
  - The 2D and 3D layouts are interconnected, reducing the possibility of inconsistencies between them.
- After numerous iterations of collider layout demo, we have essentially get the design process.
- Computer lag reduces work efficiency, as the layout is too big for such a huge project!
  - Discuss with Autodesk and Huadongyuan. Some suggestions like BIM (Building Information Modeling), Navisworks, and external interfaces are considered as candidate methods.
  - Better workstations.
  - Sub-layouts

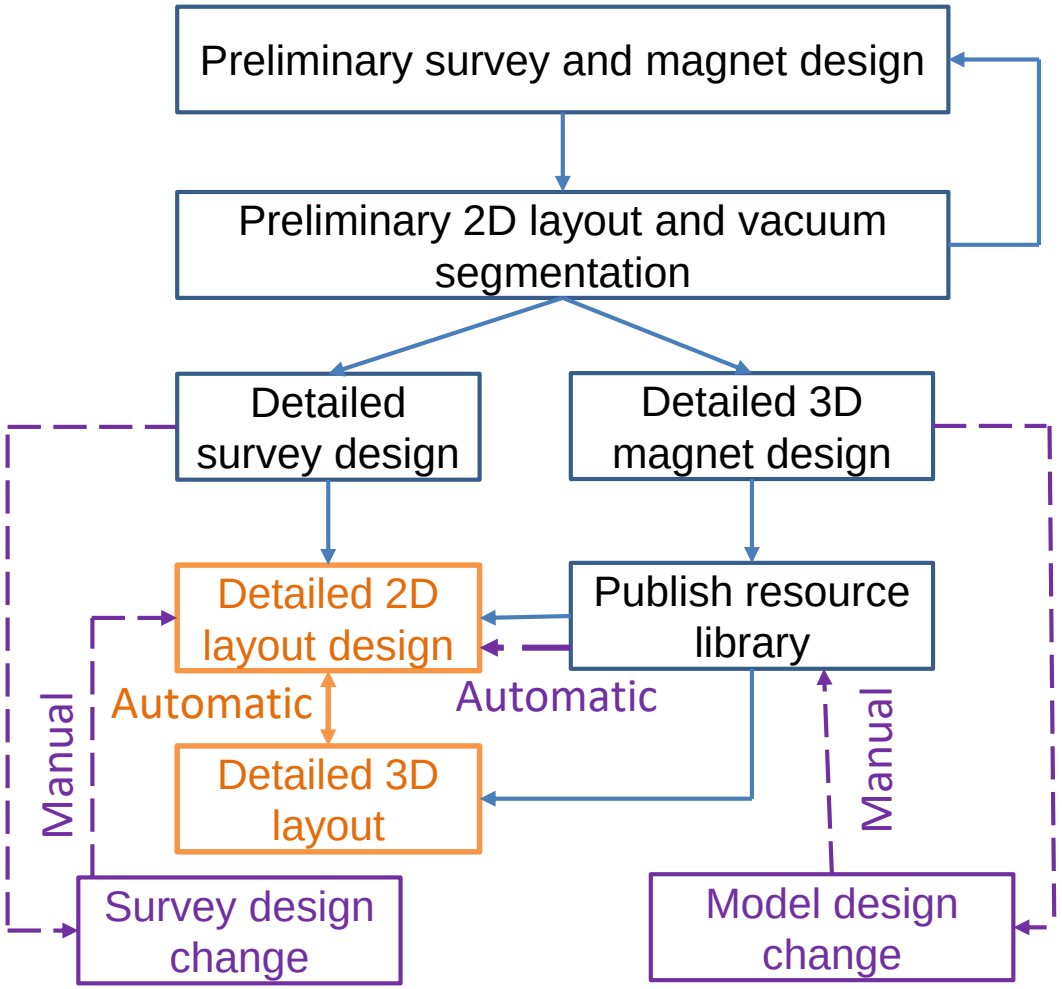

# CEPC EDR layout progress-Hardware naming

- When working on the layout, we realized the naming should be expedited.
- We have formulated preliminary opinions on equipment along the beam and the shafts.
- The naming has been applied in Linac survey, that on other accelerators are on-going

| ElementName | ElementTy | s | ds | X | Y |
|---|---|---|---|---|---|
| L.EBS.EGUN | EGUN | 0.000000 | 0.000000 | -8912.090894 | -9161.887856 |
| L.EBS.P1D.3 | EDRIFT | 0.026500 | 0.026500 | -8912.109600 | -9161.906626 |
| L.EBS.CC.1 | EKICKER | 0.056500 | 0.030000 | -8912.130776 | -9161.927876 |
| L.EBS.P1D.5 | EDRIFT | 0.152500 | 0.096000 | -8912.198542 | -9161.995875 |
| L.EBS.BPM.01 | MONI | 0.232500 | 0.080000 | -8912.255013 | -9162.052541 |
| L.EBS.ICT.01 | EDRIFT | 0.272500 | 0.040000 | -8912.283249 | -9162.080873 |
| L.EBS.BLW.001 | EDRIFT | 0.450500 | 0.178000 | -8912.408897 | -9162.206955 |
| L.EBS.GV.01 | EDRIFT | 0.522500 | 0.072000 | -8912.459721 | -9162.257954 |
| L.EBS.PR.01 | EDRIFT | 0.948500 | 0.426000 | -8912.760430 | -9162.559699 |
| L.EBS.SHB.1 | RFCW | 1.753500 | 0.805000 | -8913.328672 | -9163.129897 |
| L.EBS.BPM.02 | MONI | 1.898500 | 0.145000 | -8913.431026 | -9163.232604 |
| L.EBS.SHB.2 | RFCW | 2.360500 | 0.462000 | -8913.757147 | -9163.559848 |
| L.EBS.BUN.1 | RFCW | 2.660500 | 0.300000 | -8913.968914 | -9163.772345 |
| L.EBS.AS.001 | RFCW | 5.760500 | 3.100000 | -8916.157174 | -9165.968141 |
| L.EBS.BLW.002 | EDRIFT | 5.855500 | 0.095000 | -8916.224233 | -9166.035432 |

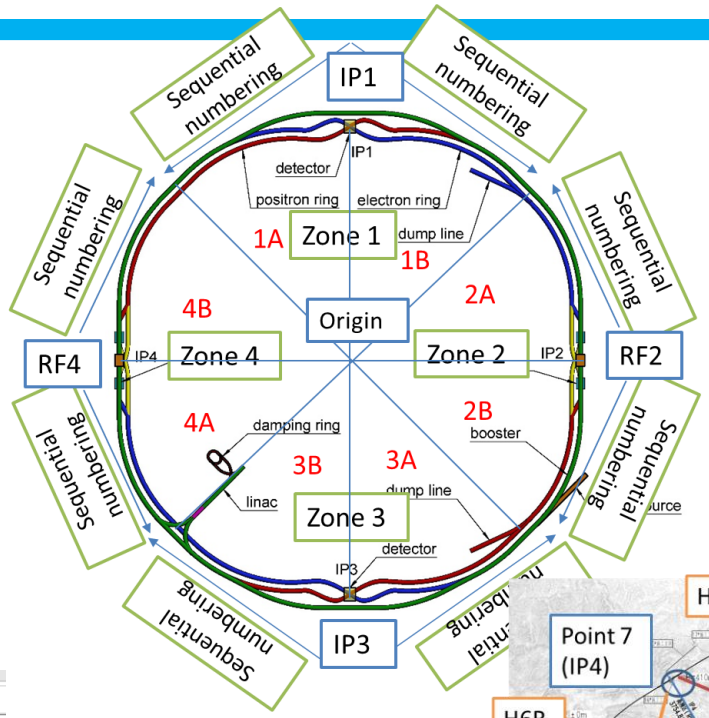


Zoning for collider and booster

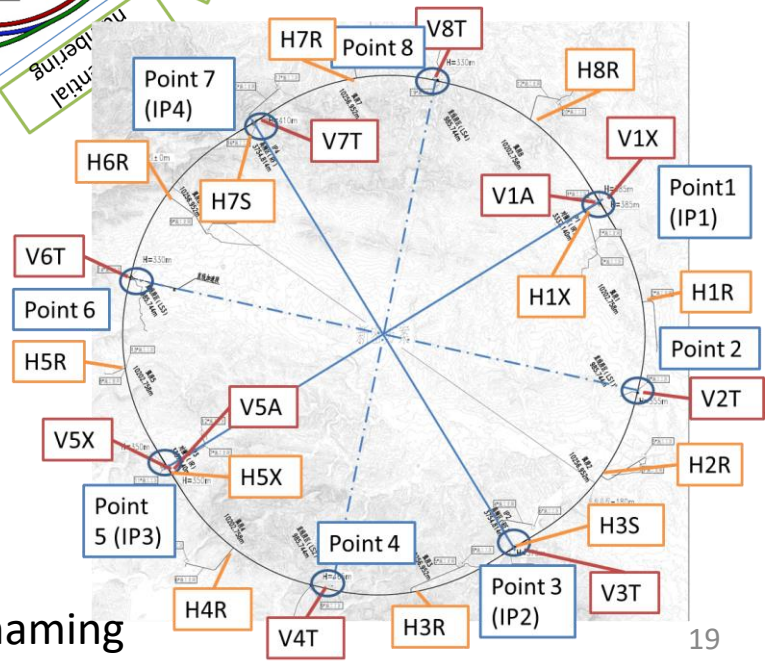


Shafts naming

# Tunnel mockup progress

- A 60-meter tunnel with typical arc section and RF section
  - Arc section： one FODO cell in both Collider and Booster （including dipole, quadrupole, sextupole, corrector and BPM）
  - RF section： one RF module in both Collider and Booster
  - Technical verification of installation and alignment for the above-mentioned equipment.
- Development progress
  - Design review: 24.8.16
  - Now: waiting for bidding for the displaying models, under machining for the supports.

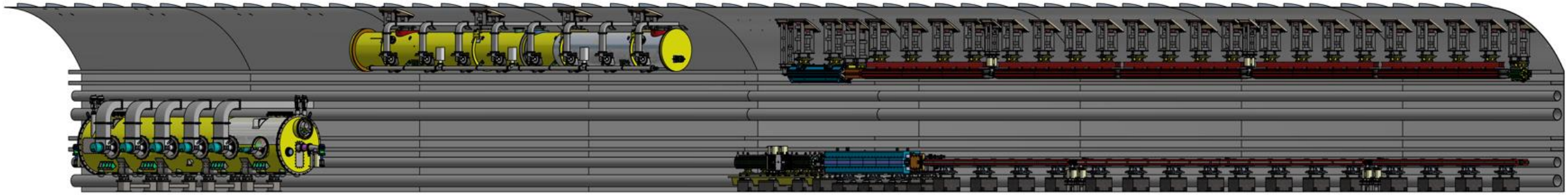

# Tunnel mockup progress-dimension optimization

- Optimizing dimensions to fulfill the space arrangement of TDR tunnel design.
  - The water and electricity connections for quadrupole and sextupoles have relocated to the upper side.
  - Cryomodule design update: bottom support→ top suspension

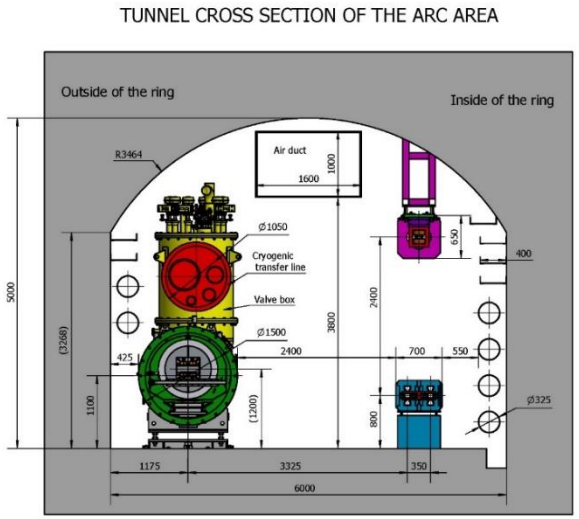


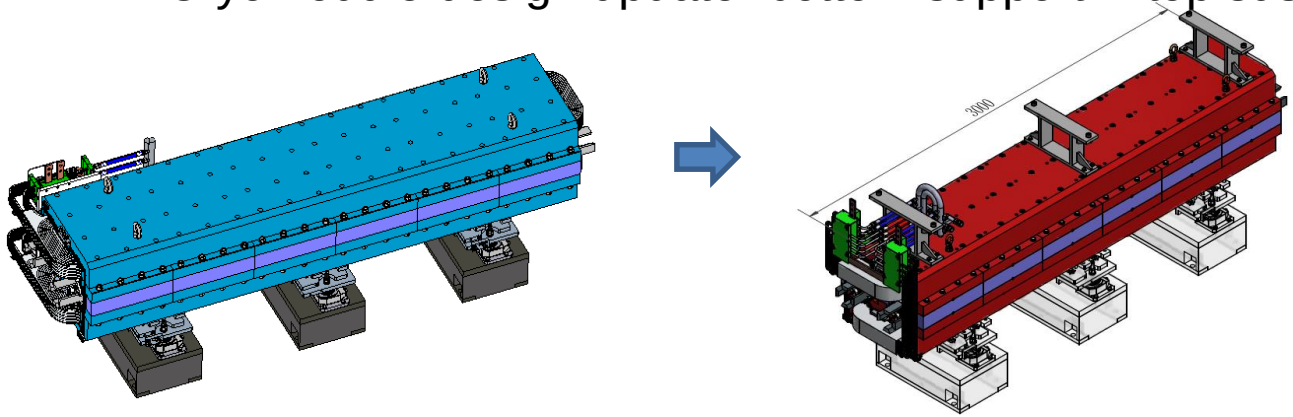


Collider quadrupole and sextupole optimization

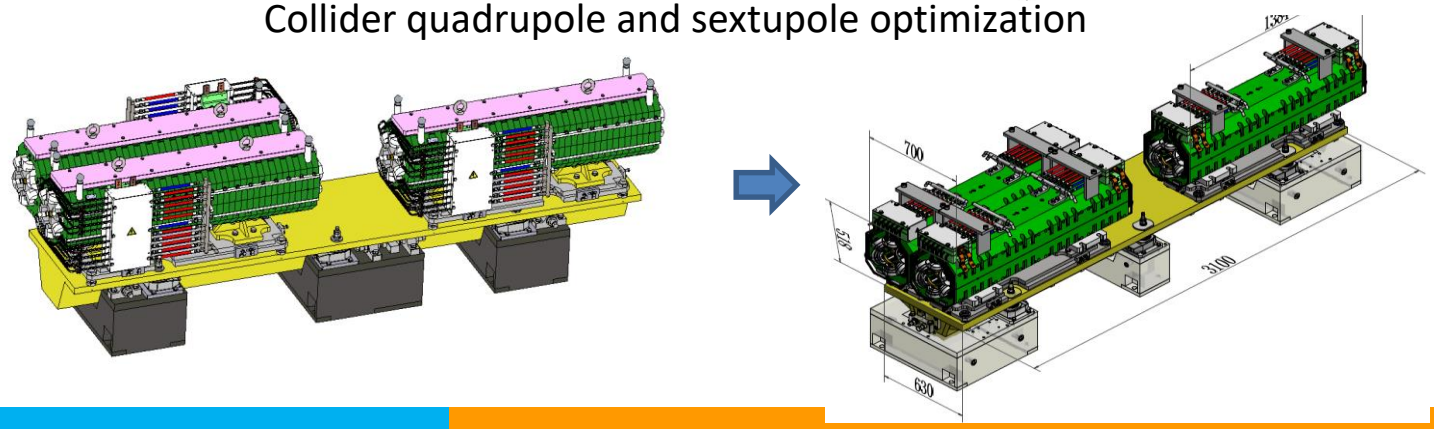


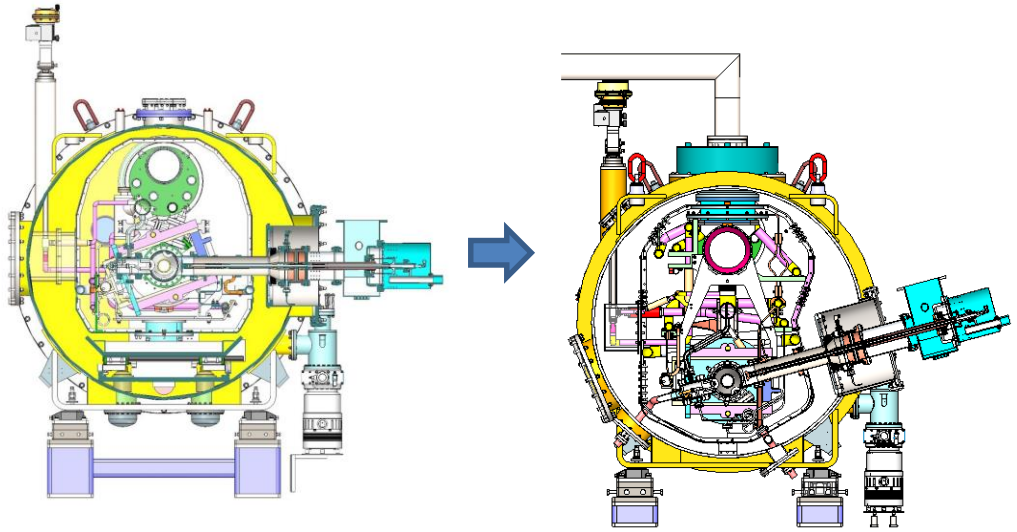

Miaofu Xu, CEPC SRF Cryogenic System EDR Design Peer Review, May, 2025

# Tunnel mockup progress-developing

- The site construction design of the tunnel mockup is under-going.
- The devices of the mockup is under developing.

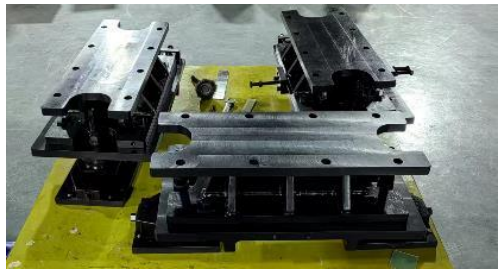

The deformation has been analyzed for the real magnet in Booster, the max. deformation by gravity is 20μm, which is small enough for lifting and operating.

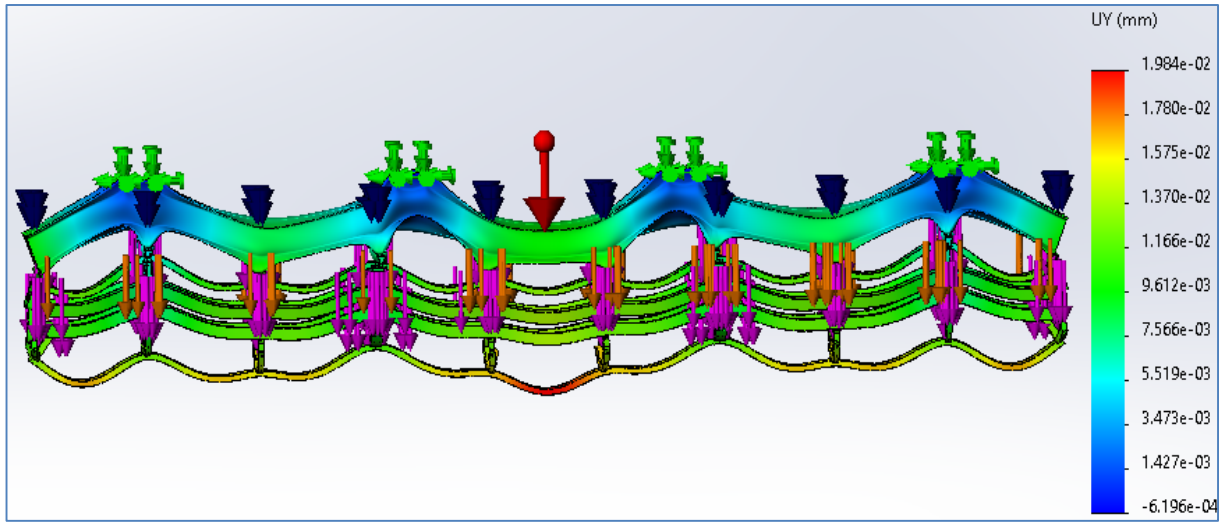


Wen Kang, Zhihui Mu, Design and production tolerance analysis of the CEPC Booster dipole-sextuple combined magnets. Mini-Review for CEPC Booster Combined Magnets. May, 2025

# Tunnel mockup progress-automatic adjusting mechanism

- The amount of CEPC equipment is huge. Therefore, improving alignment and adjusting efficiency while ensuring accuracy is one of the important aspects in EDR stage.
- The high accuracy automatic adjusting and alignment system of CEPC
  - High-accuracy measurement field (alignment): multi-camera photogrammetry, multi-point synchronous monitoring, high efficiency
  - Automatic adjusting mechanism (adjustment): movable drive, unified quick plug-and-play interface
  - The prototypes are designed and waiting developing

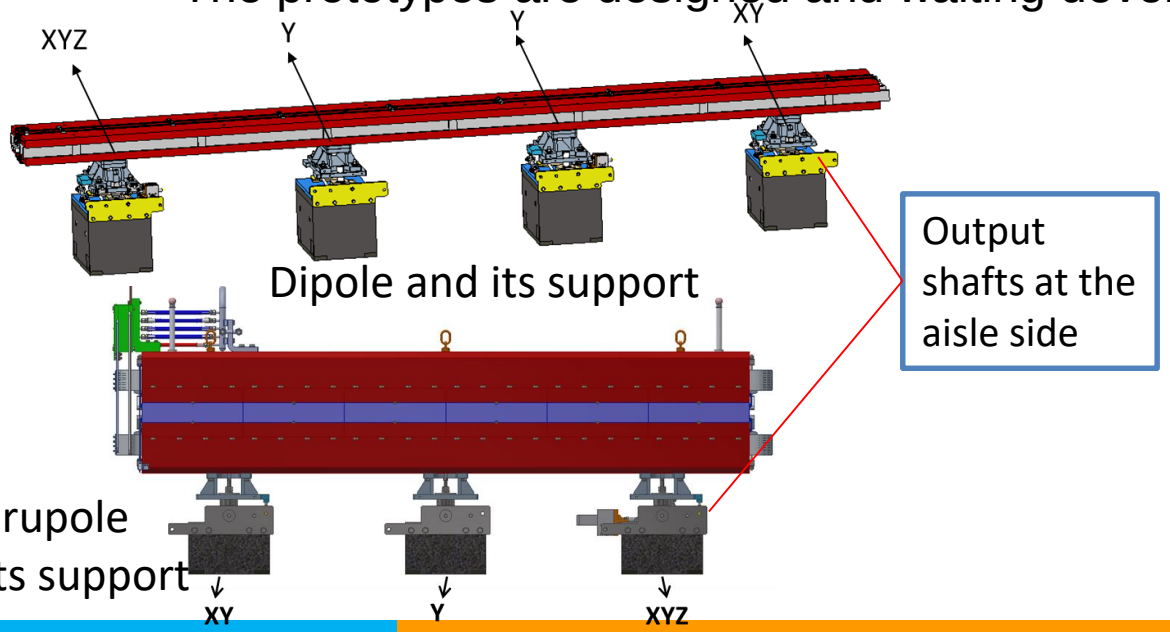


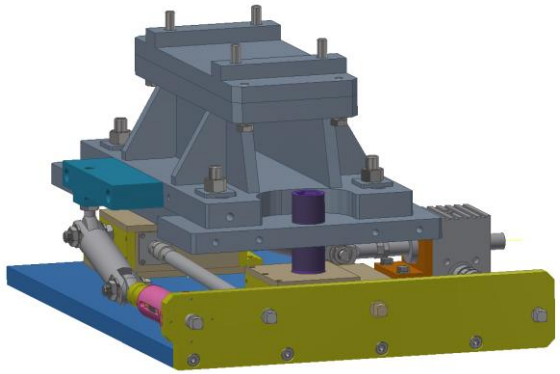

Adjusting mechanism for dipole (screw)

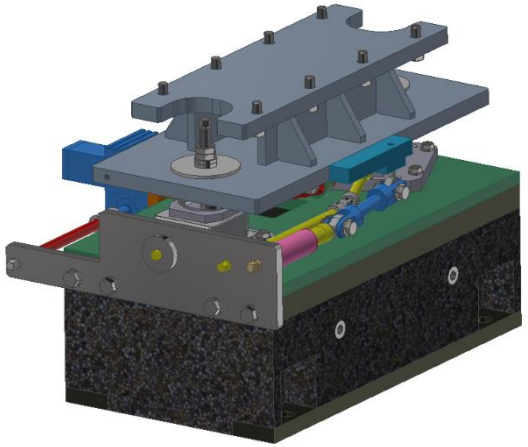

Adjusting mechanism for quadrupole (wedge)

# MDI mechanics progress-layout

- MDI layout
  - Detective angle: acos0.99
  - IP chamber： ±700mm
  - Yoke length： 11950mm
- Distance to detective angle
  - IP chamber flange: 5.3mm
  - RVC: 14.9mm

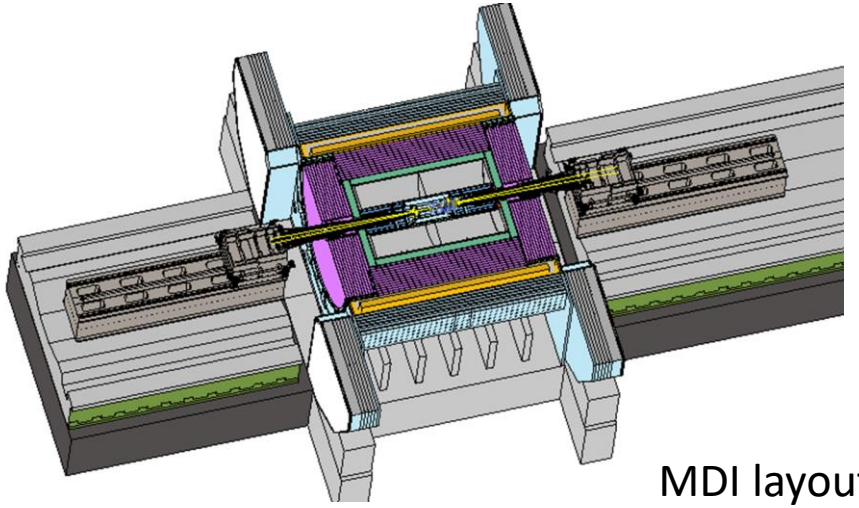

MDI layout

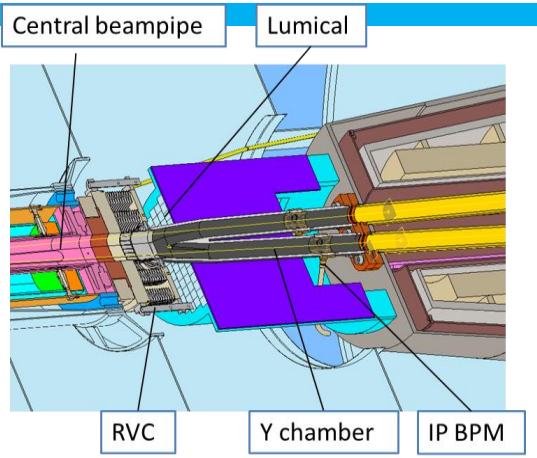


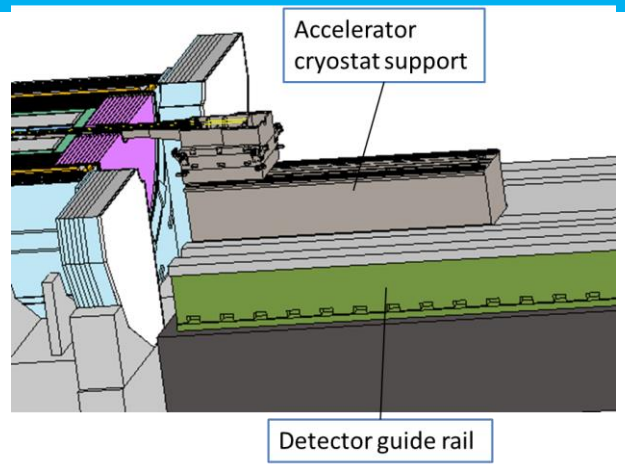


Mechanical interface between accelerator and detector

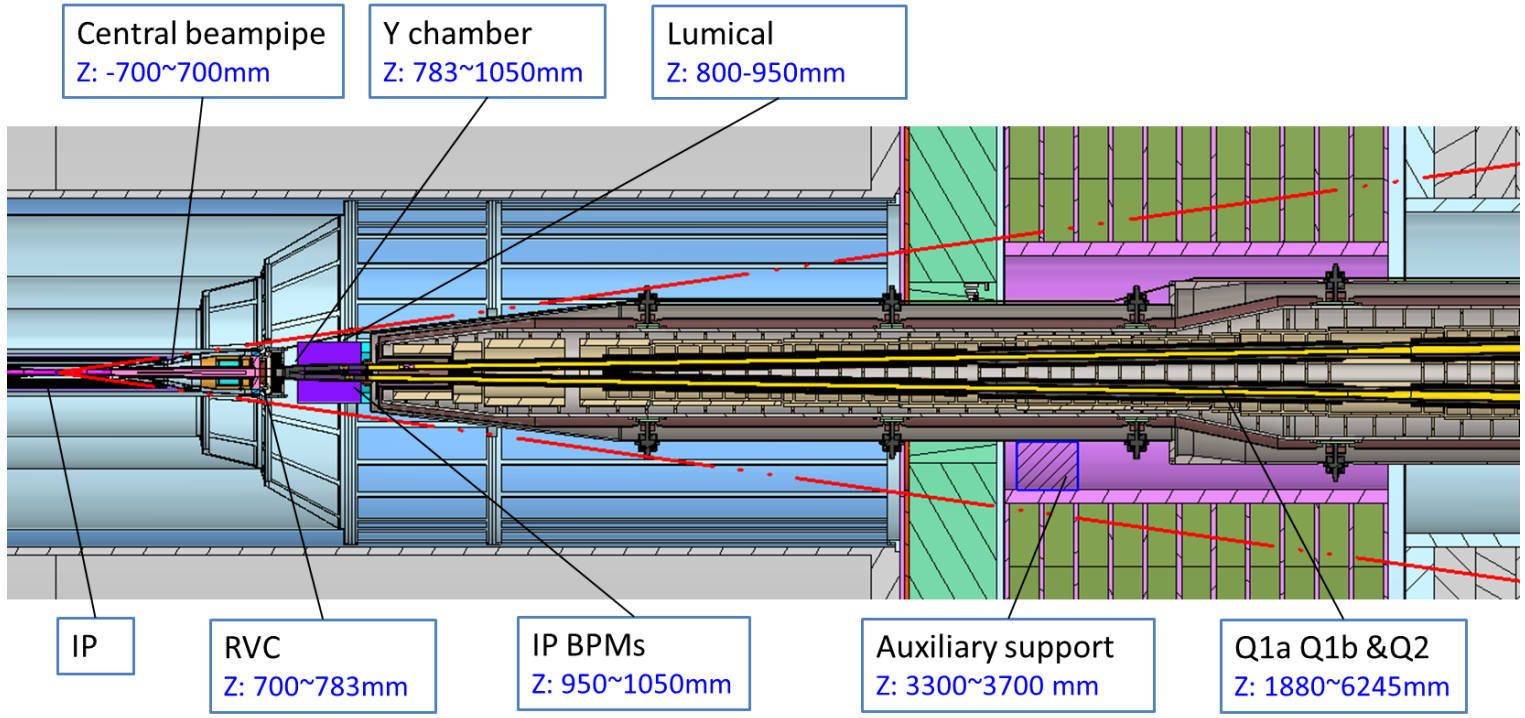

# MDI mechanics progress-mechanical analyses

- Mechanics and vibration analyses
  - **Static structure**: max. deformation and displacement change with/wo Lorentz force
  - **Vibration analyses**: natural frequency & harmonic response
  - **Structure optimization**

| | Related requirements | Response now* |
|---|---|---|
| Position accuracy (X/Y) of SC quadrupoles ≤100μm | Adjusting resolution≤5μm<br>Adjusting accuracy≤30μm | ≤5μm<br>≤30μm<br>from HEPS experience |
| | Max. def. and disp. change, < 50μm | FEA, <40μm |
| Small vibration, 1-100Hz RMS ≤4nm | High natural frequency | FEA, ~50Hz and 1 (same level to HEPS, and arc section of CEPC) |
| | Low amplification factor | |

* The response now only considers the mechanics aspect.

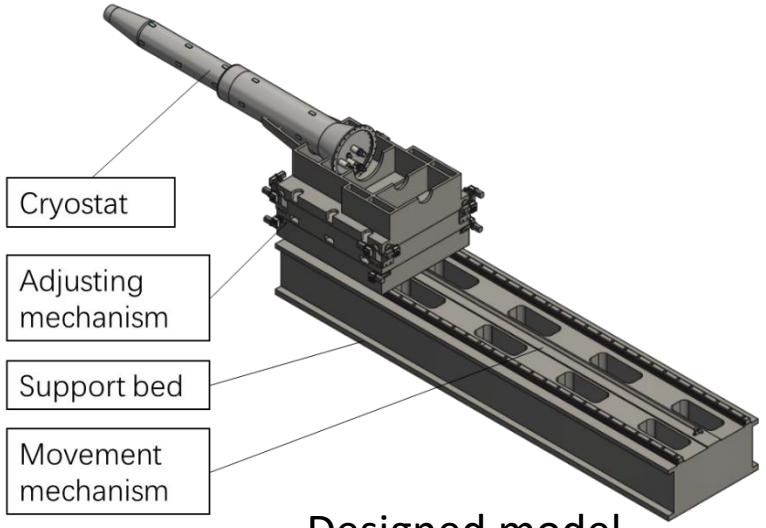


Designed model

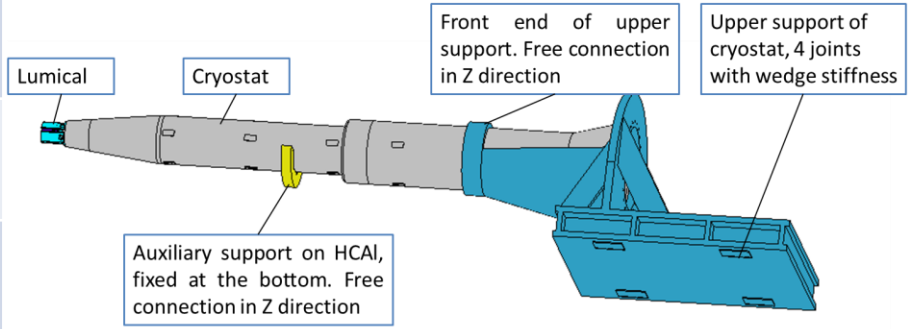


Analyses model

# MDI mechanics progress-mechanical analyses

- We made detailed analyses and presented on the MDI mini-review in June 2025.
  - Iron-free quadrupole and optimized skeleton has benefits (Max. disp. of SC quadrupoles/cryostat decreased)
  - Material optimization，no obvious effect
  - Auxiliary support，significant effect (max. disp. change from 2 mm to 84 um, max. def. smaller than 15 um, natural frequency from 17.7Hz to 49.2 Hz)
  - Thicker vacuum vessel: significant effect (max. disp. change from 84 um to 33 um)→can be considered comprehensively with radiation.
  - Support rods: significant effect→ can be optimized further
  - It seems there is no sudden positional jitter caused by the disappearance of the Lorentz force. Either for the Von mises stress. We are checking on it.
- Works to be done
  - Further optimization with collaboration with other colleagues: compromise solution with other aspects of optimization such as cryogenic.
  - After above analyses converged, we will taking into account all the relative components and make a whole FEA.

# MDI mechanics progress-mechanical analyses

- Simulation results, with Lorentz force and gravity

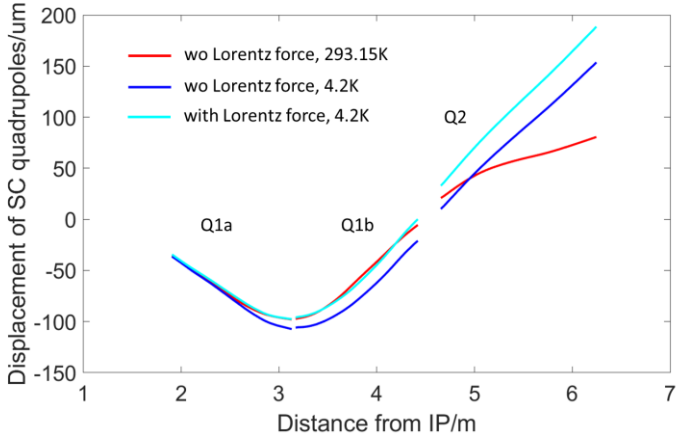


SC quadrupole displacement

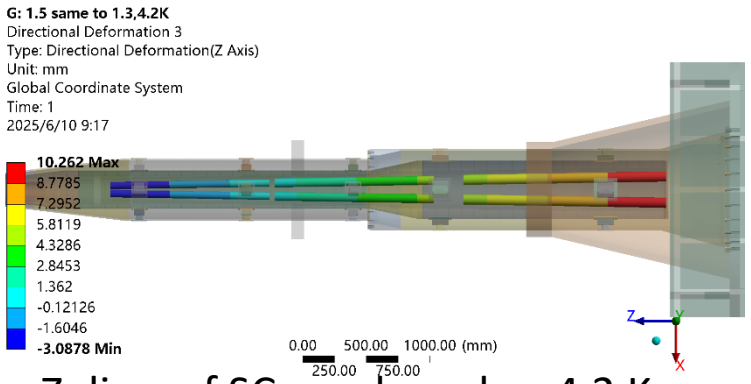


Z disp. of SC quadrupoles, 4.2 K

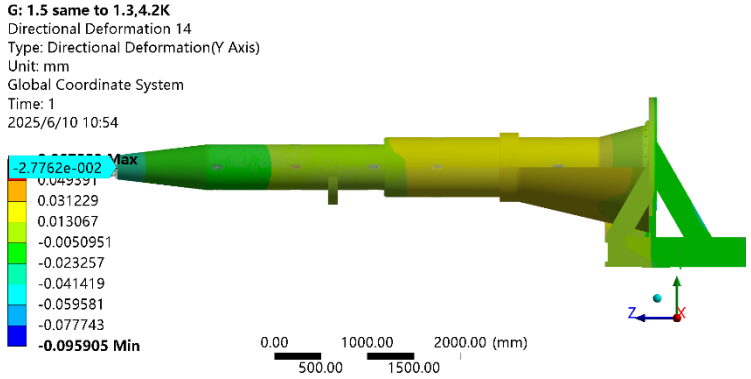


Y disp. of vacuum vessel, 4.2 K

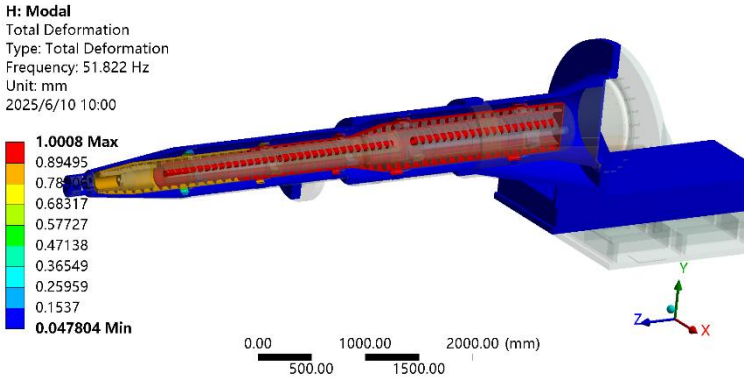


1st order of mode, 4.2 K

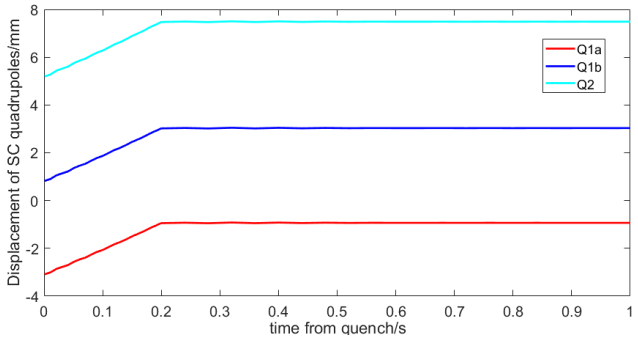


Displacement of SC quadrupoles when quenching

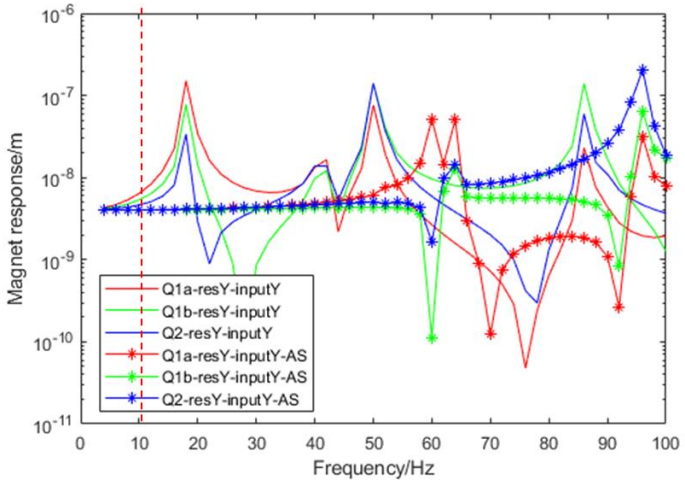


Harmonic response, 1-100Hz

# MDI mechanics progress-RVC

- RVC
  - Leak rate requirement: 2.7 ×10–11 Pa·m3/s
  - Leak rate: $Q = C \cdot \Delta P$
  - Decrease $\Delta P$ (experience from CSNS)
    - Single-layer → double layer, leak rate can be improved from 1e-6 Pa.m3/s to 8.5e-10 Pa.m3/s.
  - Decrease C
    - We are engaging on it

$$C = 34A^2 \left( L/w \right) exp[-3F/(LwR)]$$

  - A prototype will be developed

More details of MDI in: Haijing Wang, CEPC Interaction Region engineering design status, this workshop

Inflatable seal

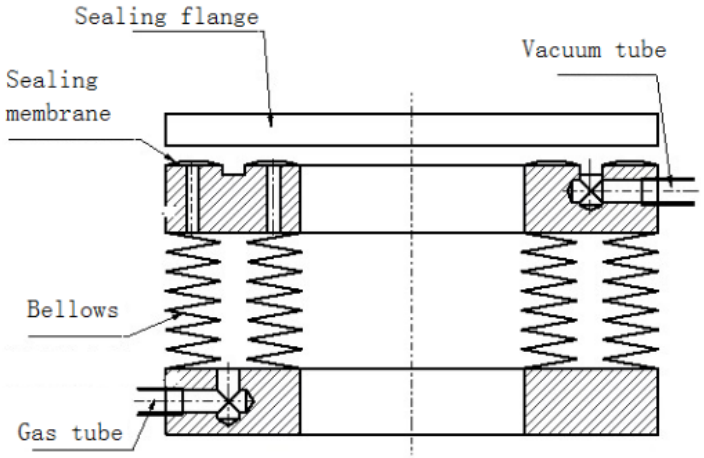


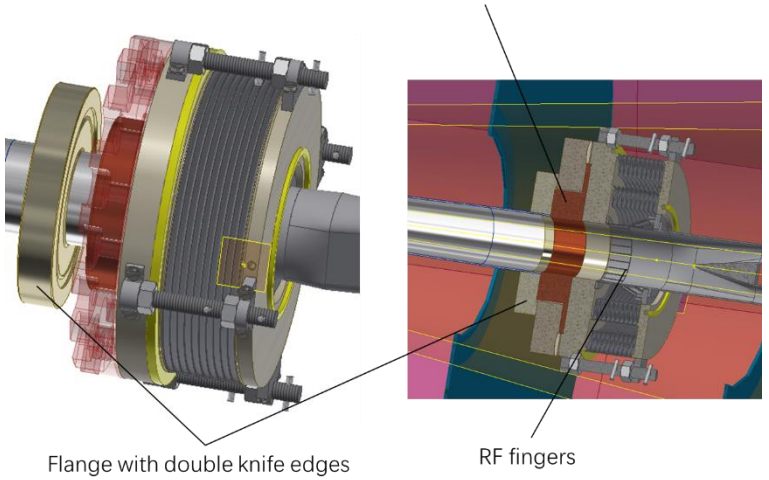

# Vibration test scheme

- Mechanical dynamic stability (vibration)
  - Ground vibration:
  - Magnet-support assembly: natural frequency? Amplification factor?
  - Damping devices: damping material? active vibration technology?
- Enhancing the natural frequency is an effective method to decrease vibration.

| | Ground motion requirements, RMS, 1-100 Hz displacement integral |
|---|---|
| MDI | ≤4 nm |
| Arc and straight section, and RF section in Collider | ≤24 nm |
| Linac | ≤50 nm |

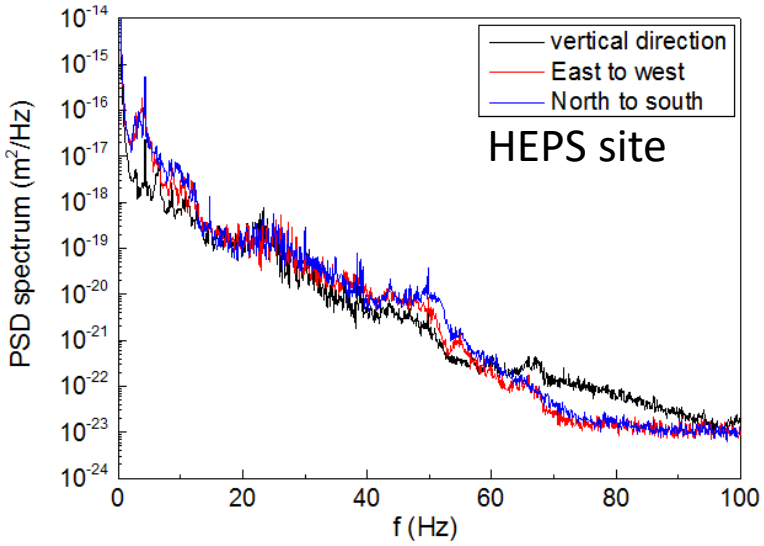


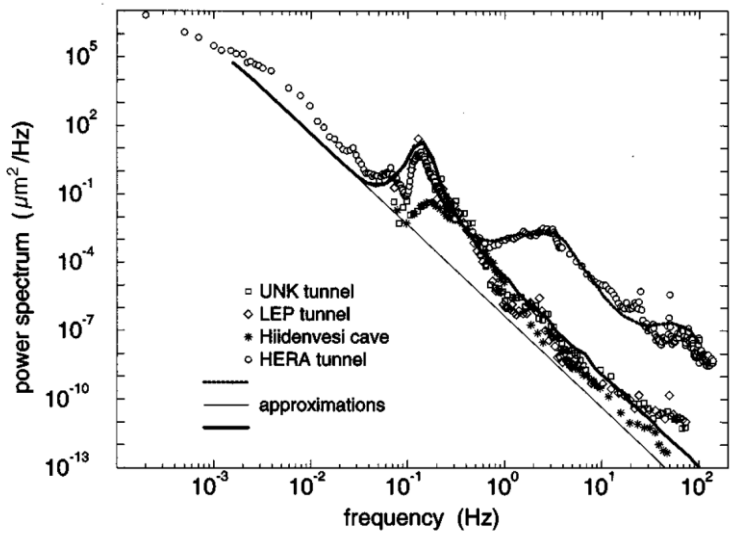


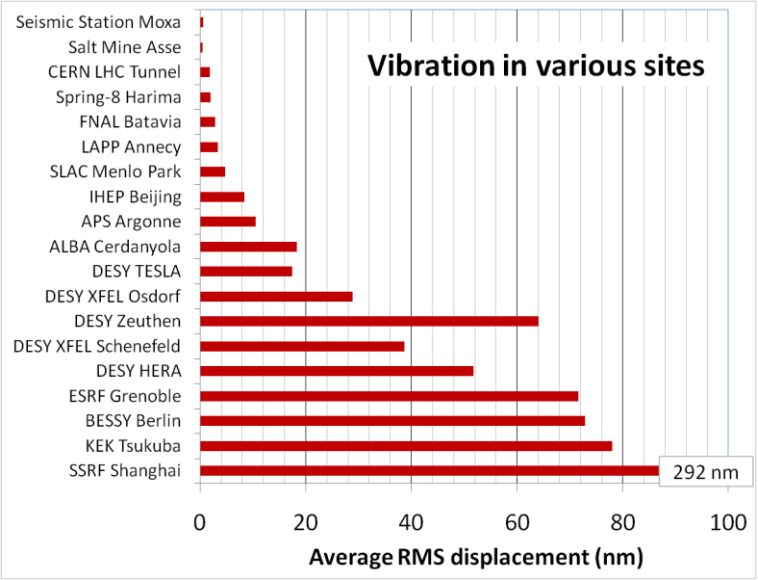

# Vibration test scheme

- Test scheme

| Test contents | | Site requirements |
|---|---|---|
| Ground motion test | Amplitude of ground vibration | Close to a real tunnel site |
| | Wave velocity and vertical attenuation. | |
| Modal test on magnet & support assembly | Collider magnet & support | Good vibration performance, to validate the rationality of the design |
| | Booster magnet & support | |

  - The test sites has been identified.
  - The vibration sensors have been tested and identified.

Sensor testing at PAPS and HEPS

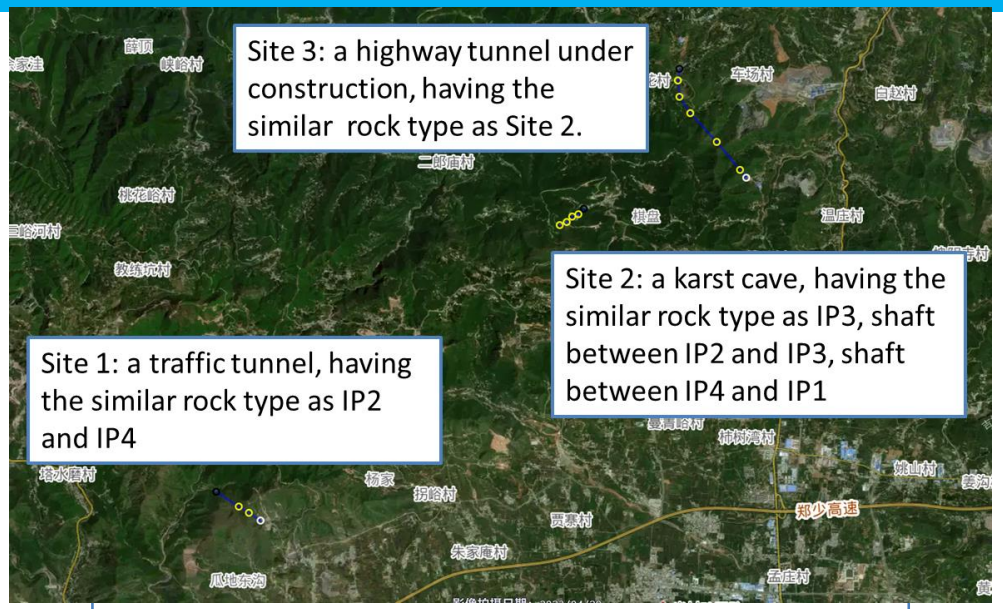


Ground motion test sites

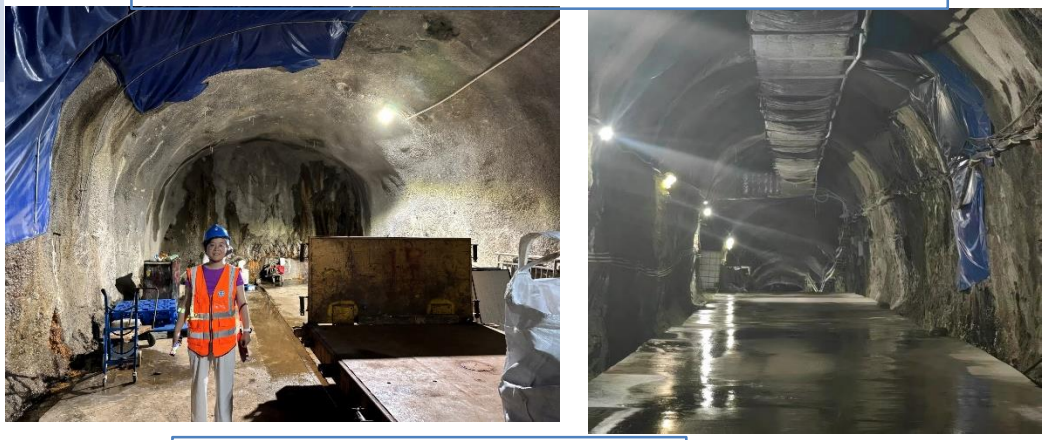

Modal test sites, at JUNO

# Summary

- We are dedicated to the detailed layout design during the EDR phase while simultaneously advancing the progress of various hardware equipment. By now, most of survey and hardware physics design have been completed. The 2D and 3D layouts of CEPC are being built synchronized. The naming of hardware along beam and shafts have been made as well.
- The design of tunnel mockup has been completed, during which we have optimized some hardware design. Part of the mockup (supports) are under developing.
- The cryostat and its supports at MDI have been analyzed detailly, after optimization, it has little effect on alignment, and no re-alignment is needed after having Lorentz force. The RVC has been designed and waiting for developing.
- The vibration test scheme has been identified, and the test sites are determined.

# Thanks for your attention!

# Thanks to the contributors!

Haijing Wang, Siyu Chen, Minxian Li, Lei Wu, Zihao Wang, Jianli Wang, Jie Gao, Yiwei Wang, Dou Wang, Cai Meng, Xiaohao Cui, Wen Kang, Mei Yang, Yafeng Wu, Xianjing Sun, Qing Li, Yingshun Zhu, Jinhui Chen, Lihua Huo, Lei Wang, Bin Chen, Yongsheng Ma, Qi Yang, Yanfeng Sui, Jingru Zhang, Jiyuan Zhai, Guangyi Tang, Zusheng Zhou, Miaofu Xu, Ruixiong Han, Sha Bai, Haoyu Shi, Huamin Qu, Min Zhou, Dapeng Jin, Guoping Lin